Utrecht Haskell Compiler

Atze Dijkstra
Utrecht University

AFP 2010, Aug 25

Utrecht Haskell Compiler (UHC)

Is a Haskell compiler (obviously)

Is a compiler & language experimentation platform

Is an engineering challenge to deal with complexity

Utrecht Haskell Compiler (UHC)

Is a Haskell compiler (obviously)

- Most of Haskell98, Haskell2010
- Extensions (higher ranked types, polymorphic kinds)
- Multiple backends
- Slowly matures towards usable tool

Is a compiler & language experimentation platform

- Whole program analysis
- Type system

Is an engineering challenge to deal with complexity

- Tree-oriented programming: Attribute Grammar system (AG)
- DSLs for subproblems: aspectwise organisation, type system specification
- Divide & conquer: into aspects, into isolated problems, into transformations, ...

Todays story

Understand how functional program transforms to runnable program

Compiler itself is case study of functional programming

Todays story

Understand how functional program transforms to runnable program

- Pipeline of transformations
- Relation between programming luxury and implementation price

Compiler itself is case study of functional programming

- Folds over abstract syntax tree representation
- Attribute grammar system

UHC pipeline

HS

UHC pipeline

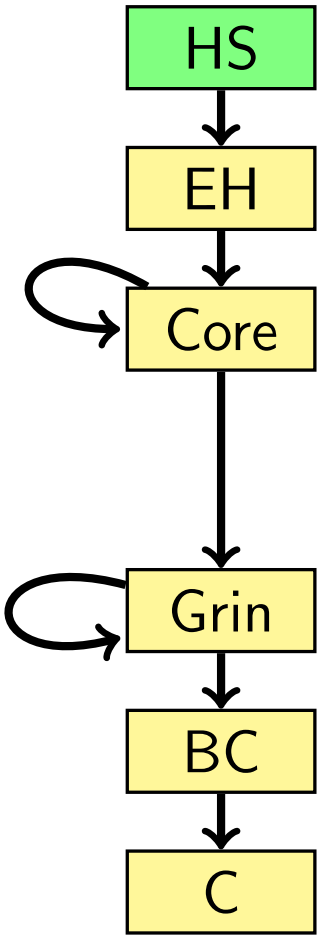

UHC pipeline

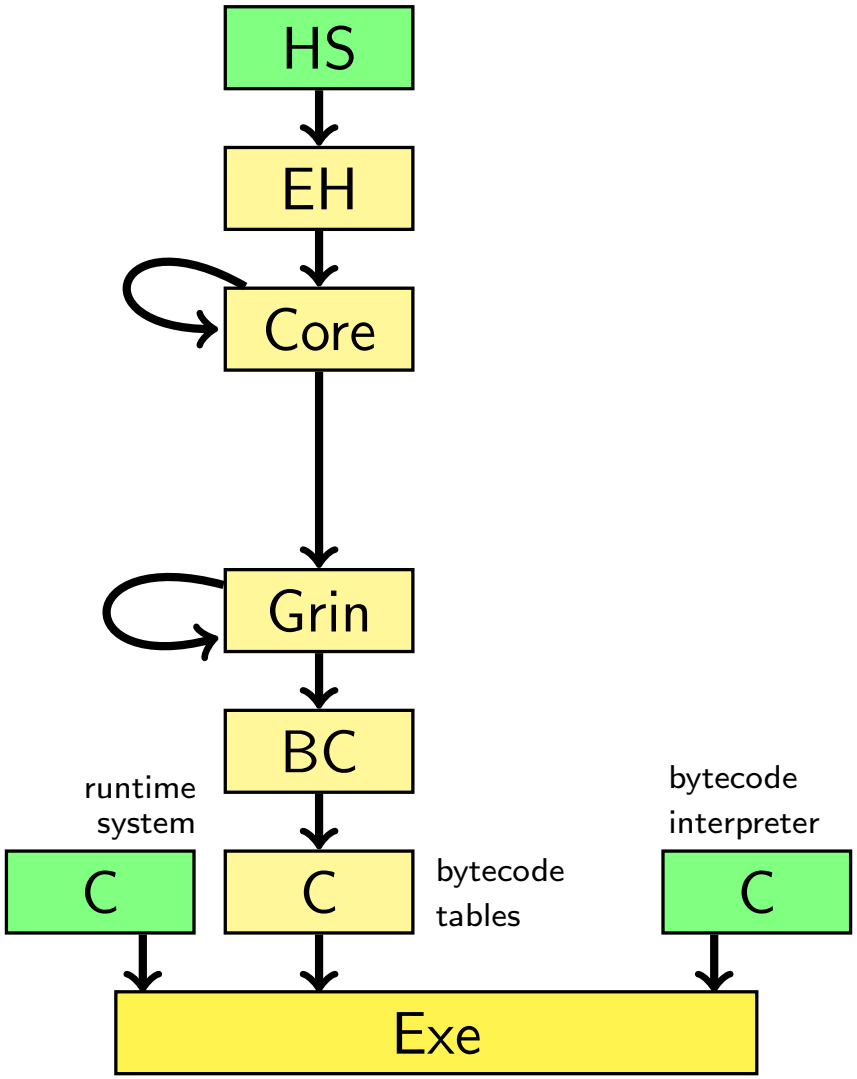

UHC pipeline

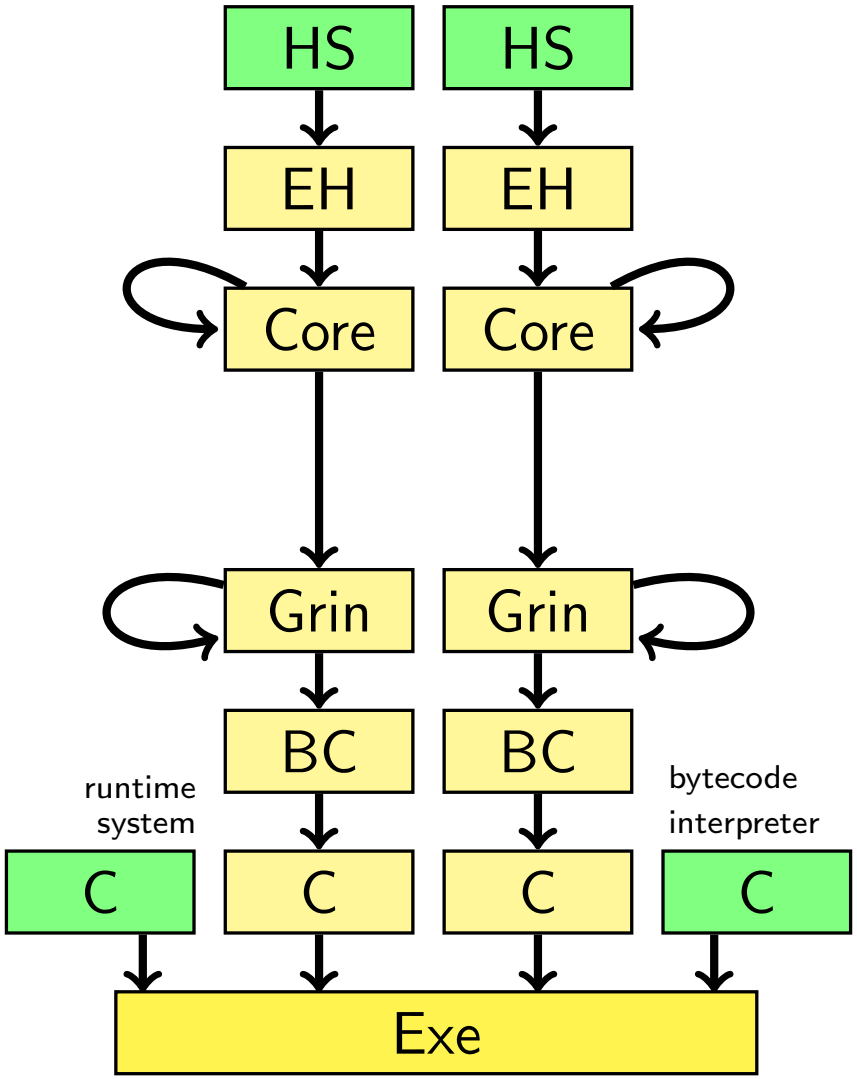

UHC pipeline

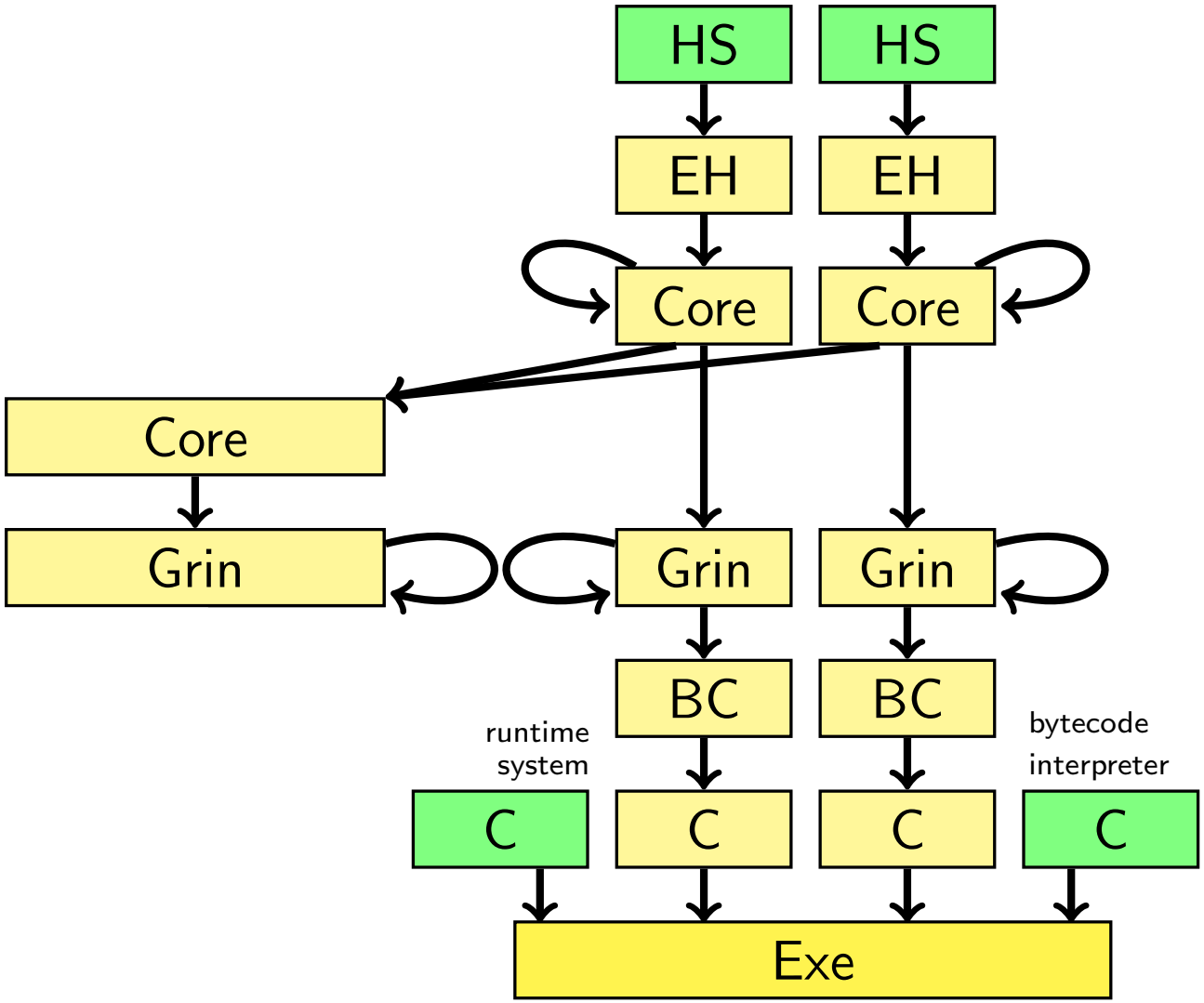

UHC pipeline

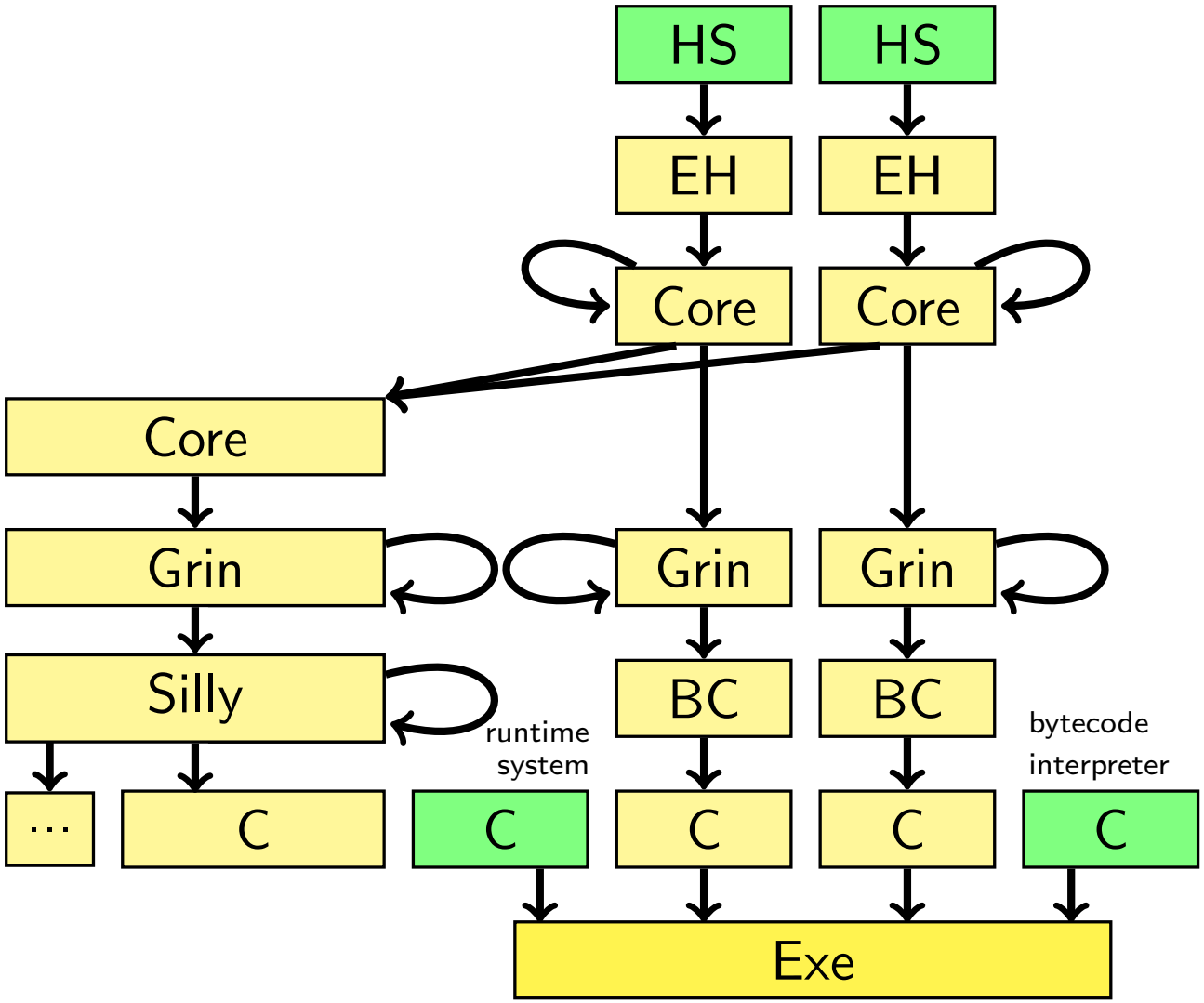

UHC pipeline

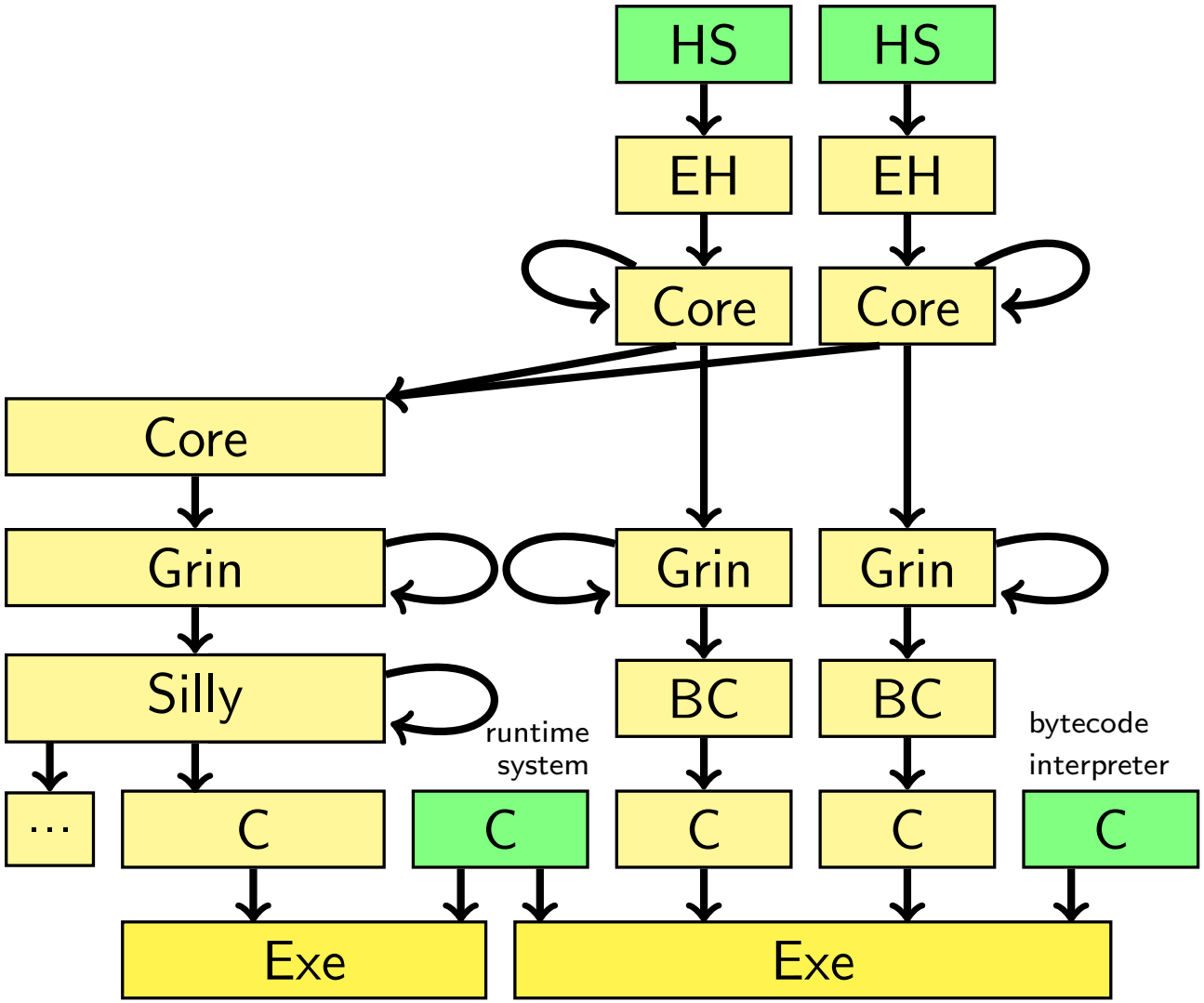

UHC pipeline

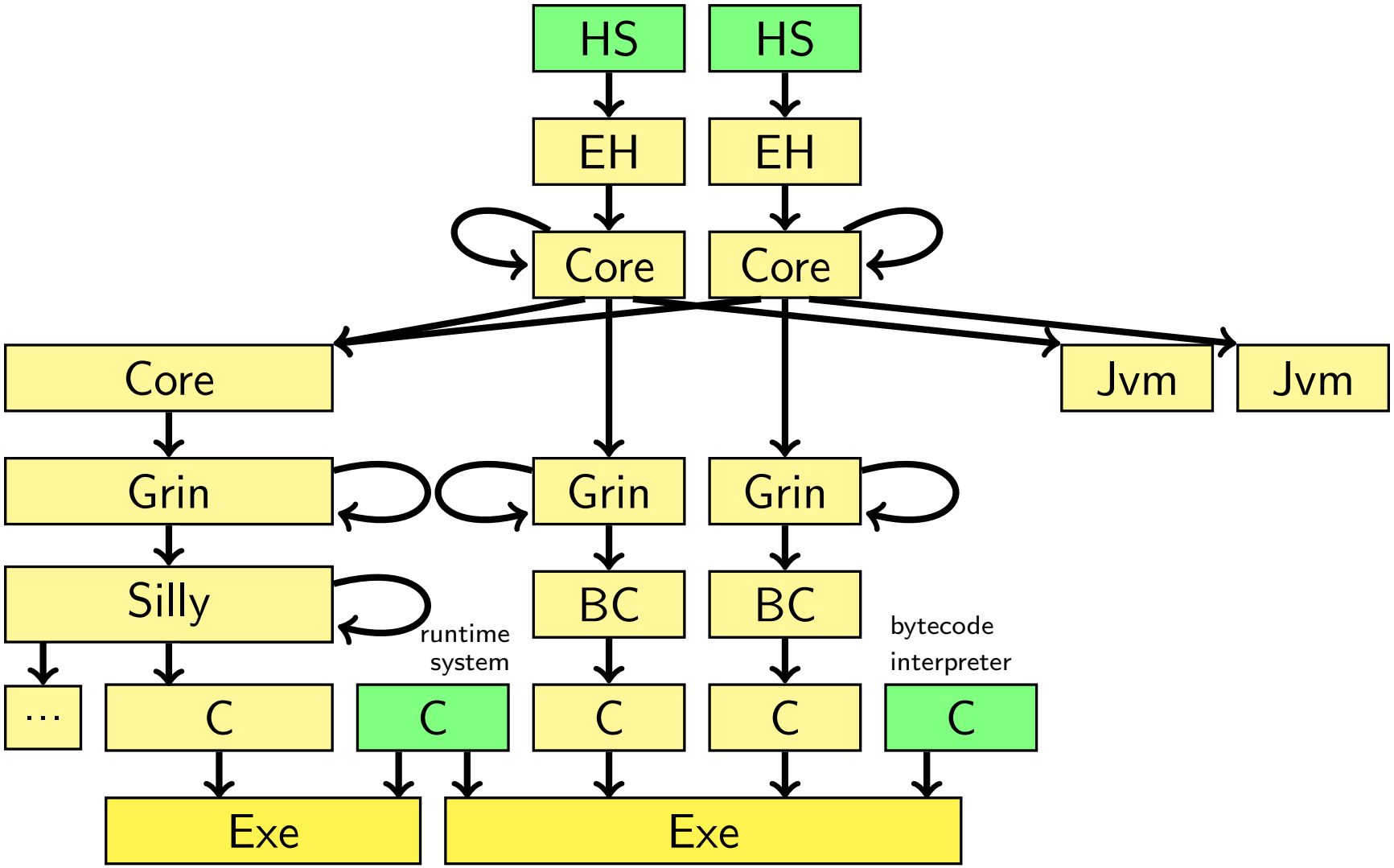

UHC pipeline

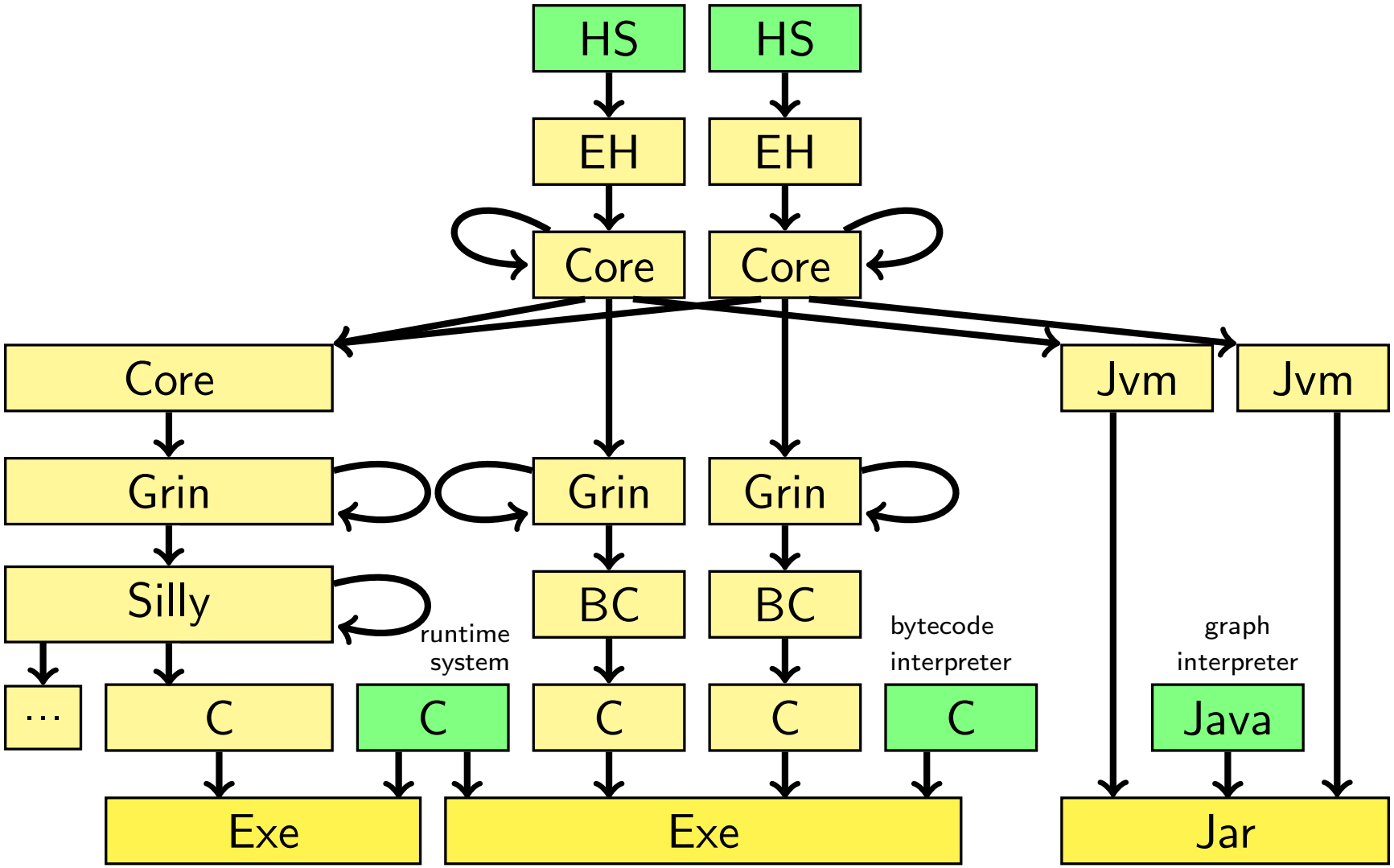

Pipeline running example

module *Main* **where**

$len :: [a] \rightarrow Int$
$len\ [\,] = 0$
$len\ (x : xs) = 1 + len\ xs$

$main = putStr\ (show\ (len\ (replicate\ 4\ \texttt{'x'})))$

Pipeline: desugaring to "Essential Haskell"

```
  -- EH
let  vb1.len :: [a] → Int
     vb1.len
        = λx1 → case x1 of
                EHC.Prelude.[]
                    → EHC.Prelude.fromInteger 0
                (EHC.Prelude.: x xs )
                    → ...
in
let vb1.main =  EHC.Prelude.putStr ...
in
let main ::  EHC.Prelude.IO ...
    main = EHC.Prelude.ehcRunMain  vb1.main
in
main
```

```
len :: [a] → Int
len [] = 0
len (x : xs) = 1 + len xs
```

Pipeline: desugaring

Name resolution

Binding groups

Syntactic sugar

Pipeline: desugaring

Name resolution

- To which definition from which module refers an identifier?
- Replace by explicit qualified reference

Binding groups

- Subsequent (type) analysis requires "define before use"
- Replace by ordered strongly connected components (based on dependency graph)

Syntactic sugar

- Alternate syntax for similar semantics: duplicate work later on
- Replace by simpler constructs:

$$
\begin{array}{lcl}
\textbf{do}\ \{s_1; \ldots s_2\} & \rightsquigarrow & s_1 \gg\!= \ldots s_2 \\
e\ \textbf{where}\ d & \rightsquigarrow & \textbf{let}\ d\ \textbf{in}\ e \\
\textbf{if}\ c\ \textbf{then}\ e_1\ \textbf{else}\ e_2 & \rightsquigarrow & \textbf{case}\ c\ \textbf{of}\ \{\mathit{True} \rightarrow e_1; \mathit{False} \rightarrow e_2\} \\
f\ p_1 = e_1; f\ p_2 = e_2 & \rightsquigarrow & \lambda x \rightarrow \textbf{case}\ x\ \textbf{of}\ \{p_1 \rightarrow e_1; p_2 \rightarrow e_2\}
\end{array}
$$

Pipeline: type directed translation to untyped Core

```
  -- Core
module $vb1 =
let rec
  { $vb1$.len =
    λ$vb1$.x1__1 →
      let !
        { $vb1$.4_42_0$!__3_0 =
          $vb1$.x1__1 } in
      case $vb1$.4_42_0$!__3_0 of
        { { 0, 2, 2 } { ..., ... } →
            ...
        ; { 1, 0, 2 } { } →
            let
              { $13_0_14 =
                ($EHC$.Prelude$.packedStringToInteger)
                  (#String "0") } in
            let
              { $13_0_12 =
                ($EHC$.Prelude$.fromInteger)
                  ($EHC$.Prelude$.3_237_0_instance_Num )
                  ($13_0_14) } in
            $13_0_12
        }
in ...
```

```
len :: [a] → Int
len [] = 0
len (x : xs) = 1 + len xs
```

Core: untyped lambda calculus (+ ...)

Pipeline: type analysis

Type inference

Class overloading resolution

Type based code generation

Pipeline: type analysis

Type inference

- Hindley-Milner
- Propagation of type annotations

Class overloading resolution

- Determine instance for class predicate

$$(+)\ 1\ (\mathit{len}\ \mathit{xs}) \rightsquigarrow ((+) :: \mathit{Num}\ \mathit{Int} \Rightarrow \mathit{Int} \rightarrow \mathit{Int})\ (1 :: \mathit{Int})\ (\mathit{len}\ \mathit{xs} :: [I$$

Type based code generation

- Dictionary, deriving, and generics

$$\begin{array}{lcl} [3] == [4] & \rightsquigarrow & (==)\ (\mathit{dEqList}\ \mathit{dEqInt})\ [3]\ [4] \\ \textbf{data}\ D\,..\,=\,..\,\textbf{deriving}\ C & \rightsquigarrow & \textbf{instance}\ C\ D\ \textbf{where}\,.. \\ \textbf{data}\ D\,.. & \rightsquigarrow & \textbf{instance}\ \mathit{Representable}\ D \\ & \rightsquigarrow & \textbf{instance}\ \mathit{Datatype}\ D;\,.. \end{array}$$

- Expressed in Core directly

Core: basics

e	$::=$	x	-- variable
	$\mid$	$int \mid char \mid string \mid integer$	-- literal
	$\mid$	$CTag$	-- constructor tag
	$\mid$	**let** $[b]$ **in** e	-- binding
	$\mid$	**letrec** $[b]$ **in** e	-- recursive binding
	$\mid$	**let** ! $[b]$ **in** e	-- strict binding
	$\mid$	$\lambda x \rightarrow e$	-- abstraction
	$\mid$	$e_1\ e_2$	-- application
	$\mid$	**case** e **of** $[a]$	-- inspection
b	$::=$	$x = e$	-- plain binding
	$\mid$	**ffi** *ccall* `"x"` x	-- ffi binding
a	$::=$	$p \rightarrow e$	-- case alternative
p	$::=$	$CTag\ [x]$	-- constructor pattern
$prog$	$::=$	**module** $x = e$	-- program

Core: the rest

Delayed code generation

Core: the rest

Delayed code generation

- Overloading resolution delayed (i.e. not following AST)
- "yet to be generated code" must be referred to

$$
\begin{aligned}
x == y &\rightsquigarrow (==)\ d\ ?\quad x\quad y \\
&\rightsquigarrow (==)\ d\ ?\quad (x :: Int)\ (y :: Int) \\
&\rightsquigarrow (==)\ dEqInt\ (x :: Int)\ (y :: Int)
\end{aligned}
$$

Core: the rest

Delayed code generation

- Overloading resolution delayed (i.e. not following AST)
- "yet to be generated code" must be referred to

$$
\begin{aligned}
x == y &\rightsquigarrow (==)\ d\ ?\quad x\quad y \\
&\rightsquigarrow (==)\ d\ ?\quad (x :: Int)\ (y :: Int) \\
&\rightsquigarrow (==)\ dEqInt\ (x :: Int)\ (y :: Int)
\end{aligned}
$$

- Holes in code: "code variables"

$$
\begin{aligned}
e ::= &\ \ ..\\
&\mid\ UID \quad \text{-- hole, identified by globally unique id}
\end{aligned}
$$

- ... to be substituted later, before code emission
- Common solution idiom for dealing with "yet unknown"

Core: simplifications

Same syntax, simpler form

Unnecessary mutual recursion

Core: simplifications

Same syntax, simpler form

Unnecessary mutual recursion

- Replace "not really" mutually recursive bindings

  $$\textbf{letrec}\ \{v_1 = ..; v_2 = ..\}\ \textbf{in}\ ..$$

  by

  $$\textbf{let}\ v_1 = ..\ \textbf{in}\ \textbf{let}\ v_2 = ..\ \textbf{in}\ ..$$

- Keeps Core generation simpler

Core: simplifications

Trivial application arguments

- Replace complex function arguments

  $$f\ (g\ a)\ (h\ b)$$

  by simple variables + extra bindings

  $$\begin{array}{l} \textbf{let}\ v_1 = g\ a\ \textbf{in} \\ \textbf{let}\ v_2 = h\ b\ \textbf{in} \\ \quad f\ v_1\ v_2 \end{array}$$

- Closer to actual code
- Administrative normal (A-normal) form

Core: simplifications

Lambda lifting

- Replace implicit globals

$$g = \lambda x\ z \rightarrow \textbf{let}\ f = \lambda y \rightarrow x + y\ \textbf{in}\ f\ z$$

  by explicit arguments

$$f' = \lambda x\ y \rightarrow x + y$$
$$g = \lambda x\ z \rightarrow \textbf{let}\ f = f'\ x\ \textbf{in}\ f\ z$$

- No need to deal with environments (in analyses, when constructing closures)
- No local lambdas anymore, lifted to outermost level

Pipeline: lambda lifted translation to lazy-less Grin

```
-- GRIN
module $vb1
{ rec
  { $vb1.len $vb1.x1__1
    = { eval $vb1.x1__1; λ$vb1.4_42_0!__3_0 →
          case $vb1.4_42_0!__3_0 of
          { (#0/C {2, 2})
              → {...}
          ; (#1/C {0, 2})
              → { store (#0/C {1, 1}/$EHC.Prelude.PackedString "0"); λ$19_31_0 →
                  store (#0/F/$EHC.Prelude.packedStringToInteger $19_31_0); λ$13_0_14 →
                  store (#0/P/0/$EHC.Prelude.fromInteger$ EHC.Prelude.3_237_0__Num); λ$19_33_0 →
                  store (#0/A/$_ $19_33_0 $13_0_14); λ$13_0_12 →
                  eval $13_0_12 }
          }}}
```

```
len :: [a] → Int
len [] = 0
len (x : xs) = 1 + len xs
```

- Evaluation explicit
- Laziness explicit
- Starting point for both interpreter and whole program analysis

Grin: basics

e ::=	**unit** v	-- basic value for direct use
|	$e; \lambda p \rightarrow e$	-- sequencing
|	**eval** x	-- evaluation
|	**apply** $x\ [v]$	-- application
|	**store** v	-- construct heap cell for node
|	**fetch** x	-- retrieve heap cell for node
|	**update** $x\ v$	-- overwrite heap cell
|	**case** $v\ [a]$	-- node inspection
v ::=	x	-- variable
|	$tag\ [v]$	-- node construction
|	$int \mid string$	-- literal
p ::=	x	-- variable (bind)
|	$tag\ [x]$	-- node (bind fields)
a ::=	$p \rightarrow e$	-- case alternative

Grin: basics

$$
\begin{array}{lll}
tag & ::= \mathbf{C}\ CTag & \text{-- plain constructor} \\
 & \mid\ \mathbf{F}\ x & \text{-- saturated function closure} \\
 & \mid\ \mathbf{P}\ x\ int & \text{-- non-saturated function closure} \\
 & \mid\ \mathbf{A} & \text{-- apply closure} \\
prog & ::= \mathbf{module}\ x\ [c]\ [b] & \text{-- program} \\
b & ::= x\ [x] = e & \text{-- function binding} \\
c & ::= x = v & \text{-- CAF binding}
\end{array}
$$

- Global bindings are mutual recursive

Grin: explicit eval (and apply)

Eval knows to evaluate

```
$eval $x_5
  = { fetch $x_5; λ$x_1013 →
      case $x_1013 of
        {(#0/C {2, 2}/$$, 2 $x_1132 $x_1133)
            → {unit $x_1013}
        ; (#0/C {1, 1}/$Int $x_1130)
            → {unit $x_1013}
        ..
        ; (#0/P/1/$UHC.Base.primSubInt $x_1125)
            → {unit $x_1013}
        ; (#0/P/2/$UHC.Base.primSubInt)
            → {unit $x_1013}
        ..
        ; (#0/F/$Main.len $x_1035)
            → {call $Main.len $x_1035; λ$x_1036 →
                update $x_1036 $x_5}
        ; (#0/F/$UHC.Base.replicate~spec1)
            → {call $UHC.Base.replicate~spec1; λ$x_1051 →
                update $x_1051 $x_5}
        ..
        }}
```

Closed world when doing whole program analysis:

- **$eval** knows how to evaluate *all* nodes occurring in the program
- (and **apply** knows to apply)

Grin: eval inlining

Eval inlining

```
$vb1.len $vb1.x1__1
  = { fetch $vb1.x1__1; λ$x_1009 →
      case $x_1009 of
        {(#0/C {2,2}/$UHC.Base.$ : $x_1011 $x_1012)
            → {unit $x_1009}
        ; (#1/C {0,2}/$UHC.Base.[])
            → {unit $x_1009}
        ; (#0/F/$UHC.Base.replicate~spec1)
            → {call $UHC.Base.replicate~spec1; λ$x_1010 →
                update $x_1010 $vb1.x1__1}
        } ; λ ...
        }}
```

Using "Heap Points To" (HPT) analysis

- Inline **$eval** alternatives only for node formats known to be pointed to

Grin: the rest

Foreign functions

- Must be explicit in (un)boxing
- Requires annotation of variables

$$
\begin{array}{lll}
e & ::= & .. \\
 & | & \textbf{ffi}\ \textit{ccall}\ \texttt{"x"}\ x \quad \text{-- foreign function call} \\
p & ::= & .. \\
 & | & \textbf{basic}\ \textit{ann}\ x \quad \text{-- unpack as unboxed basic type (Int, Float, ...)} \\
 & | & \textbf{enum}\ x \quad \text{-- unpack as enum} \\
 & | & .. \quad \text{-- etc.} \\
\textit{ann} & ::= & .. \quad \text{-- info about size, ...}
\end{array}
$$

Local mutual recursiveness

- Requires special nodes not yet filled with data

Pipeline: finally, a program!

- Different backends tap at different points from the pipeline
- For example, interpreter based backend taps non-whole program analysed Grin:

```
  -- bytecode
static GB_Byte vb1_bytecode [] =
{ /*0 : l1ts08 0x08 */  /* lbldef [.cod 0] */
                        /* funstart [vb1.len] */
                        /* iduse [vb1.x1__1 4 word LoadSrc_TOS_Rel { ldsrcOff = 2, ldsrcNrWords = 1 }] */
                        /* [LoadSrc_TOS_Rel { ldsrcOff = 2, ldsrcNrWords = 1 }] */
  0x20, 0x08
, /*2 : evalt */
  0xe0, 0x00, 0x00, 0x00, 0x00
, /*7 : l1ts08 0x00 */  /* stackoff [1] */
                        /* iduse [vb1.4 _42_0 !__ 3 _0 annotdflt LoadSrc_TOS] */
  0x20, 0x00
, /*9 : lnt */
  0xfc
, /*10 : casecall */
  0xf6
```

Tree-oriented programming

How is UHC programmed?

- Tree representation, transformation, generation: UU Attribute Grammar system

Tree-oriented programming

How is UHC programmed?

- Tree representation, transformation, generation: UU Attribute Grammar system

But also

- Parser: UU parsing library
- Logistics: *Shuffle* for generating different compilers for different variants & aspects
- Type system: *Ruler* for describing type system & and generating implementation (current research)

Tree-oriented programming

```
data Expr
=
  Con Int
| Add Expr Expr
| Mul Expr Expr
```

Tree-oriented programming

$$\textbf{data}\ \mathit{Expr} \qquad\qquad \mathit{calc} :: \mathit{Expr} \rightarrow \mathit{Int}$$

$$\begin{array}{ll} = & \\ & \mathit{Con}\ \mathit{Int} \\ \mid & \mathit{Add}\ \mathit{Expr}\ \mathit{Expr} \\ \mid & \mathit{Mul}\ \mathit{Expr}\ \mathit{Expr} \end{array}$$

Tree-oriented programming

data *Expr*	*fold*	*calc* :: *Expr* → *Int*
=	::	
Con Int	(*Int* → *b*)	
| *Add Expr Expr*	→ (*b* → *b* → *b*)	
| *Mul Expr Expr*	→ (*b* → *b* → *b*)	
	→ *Expr* → *b*	

Tree-oriented programming

$$
\begin{array}{l}
\textbf{data}\ \mathit{Expr} \\
\quad = \\
\qquad \mathit{Con}\ \mathit{Int} \\
\quad \mid \mathit{Add}\ \mathit{Expr}\ \mathit{Expr} \\
\quad \mid \mathit{Mul}\ \mathit{Expr}\ \mathit{Expr}
\end{array}
$$

$$
\begin{array}{l}
\mathit{fold} \\
\quad :: \\
\qquad (\mathit{Int} \quad \rightarrow b) \\
\quad \rightarrow (b \rightarrow b \rightarrow b) \\
\quad \rightarrow (b \rightarrow b \rightarrow b) \\
\quad \rightarrow \mathit{Expr} \quad \rightarrow b
\end{array}
$$

$$\mathit{calc} :: \mathit{Expr} \rightarrow \mathit{Int}$$

$$\mathit{calc} = \mathit{fold}\ \mathit{id}\ (+)\ (*)$$

Tree-oriented programming

data *Expr*	*fold*	*calc* :: *Expr* → *Int*
=	::	*calc* = *fold*
Con Int	(*Int* → *b*)	(λ*n* → *n*)
| *Add Expr Expr*	→ (*b* → *b* → *b*)	(λ*x y* → *x* + *y*)
| *Mul Expr Expr*	→ (*b* → *b* → *b*)	(λ*x y* → *x* ∗ *y*)
	→ *Expr* → *b*	

Tree-oriented programming

```
data Expr
=
  Con Int
| Add Expr Expr
| Mul Expr Expr
```

```
type Sem b
=
( (Int     → b)
, (b → b → b)
, (b → b → b)
)

fold :: Sem b →
        Expr → b
```

```
calc :: Expr → Int

calc = fold
(λn   → n     )
(λx y → x + y)
(λx y → x * y )
```

Tree-oriented programming

```
data Expr
=
  Con Int
| Add Expr Expr
| Mul Expr Expr
```

```
type Sem b
=
( (Int     → b)
, (b → b → b)
, (b → b → b)
)

fold :: Sem b →
        Expr → b
```

```
calcsem :: Sem Int
calcsem =
(λn   → n
, λx y → x + y
, λx y → x * y
)

calc :: Expr → Int
calc = fold calcsem
```

Tree-oriented programming

```
data Expr
=
  Con Int
| Add Expr Expr
| Mul Expr Expr
| Var Name
```

```
type Sem b
=
( (Int     → b)
, (b → b → b)
, (b → b → b)
)

fold :: Sem b →
        Expr → b
```

```
calcsem :: Sem Int
calcsem =
(λn   → n
, λx y → x + y
, λx y → x * y
)

calc :: Expr → Int
calc = fold calcsem
```

Tree-oriented programming

```
data Expr
=
  Con Int
| Add Expr Expr
| Mul Expr Expr
| Var Name
```

```
type Sem b
=
( (Int  -> b)
, (b -> b -> b)
, (b -> b -> b)
, (Name -> b)
)

fold :: Sem b ->
        Expr -> b
```

```
calcsem :: Sem Int
calcsem =
(\n   -> n
,\x y -> x + y
,\x y -> x * y
)

calc :: Expr -> Int
calc = fold calcsem
```

Tree-oriented programming

```
data Expr
=
  Con Int
| Add Expr Expr
| Mul Expr Expr
| Var Name
```

```
type Sem b
=
( (Int      → b)
, (b → b → b)
, (b → b → b)
, (Name → b)
)

fold :: Sem b →
        Expr → b
```

```
calcsem :: Sem Int
calcsem =
(λn     → n
, λx y → x + y
, λx y → x * y
, λs    → lookup s e
)

calc :: Expr → Int
calc = fold calcsem
```

Tree-oriented programming

```
data Expr
=
  Con Int
| Add Expr Expr
| Mul Expr Expr
| Var Name
```

```
type Sem b
=
( (Int  -> b)
, (b -> b -> b)
, (b -> b -> b)
, (Name -> b)
)

fold :: Sem b ->
        Expr -> b
```

```
calcsem :: Sem Int
calcsem =
(\n   -> n
,\x y -> x + y
,\x y -> x * y
,\s   -> \e -> lookup s e
)

calc :: Expr -> Int
calc = fold calcsem
```

Tree-oriented programming

```
data Expr
=
  Con Int
| Add Expr Expr
| Mul Expr Expr
| Var Name
```

```
type Sem b
=
( (Int     → b)
, (b → b → b)
, (b → b → b)
, (Name → b)
)

fold :: Sem b →
        Expr → b
```

```
calcsem :: Sem (Env → Int)
calcsem =
(λn   → n
, λx y → x + y
, λx y → x * y
, λs   → λe → lookup s e
)

calc :: Expr → Int
calc = fold calcsem
```

Tree-oriented programming

```
data Expr
=
  Con Int
| Add Expr Expr
| Mul Expr Expr
| Var Name
```

```
type Sem b
=
( (Int     → b)
, (b → b → b)
, (b → b → b)
, (Name    → b)
)

fold :: Sem b →
        Expr → b
```

```
calcsem :: Sem (Env → Int)
calcsem =
(λn   → λe → n
, λx y → λe → x e + y e
, λx y → λe → x e ∗ y e
, λs   → λe → lookup s e
)

calc :: Expr → Int
calc = fold calcsem testenv
```

Tree-oriented programming

```
data Expr
=
  Con Int
| Add Expr Expr
| Mul Expr Expr
| Var Name
```

```
type Sem b
=
( (Int     → b)
, (b → b → b)
, (b → b → b)
, (Name    → b)
)

fold :: Sem b →
        Expr → b
```

```
calcsem :: Sem (Env → Int)
calcsem =
(λn   → λe → n
, λx y → λe → x e + y e
, λx y → λe → x e ∗ y e
, λs   → λe → lookup s e
)

calc :: Expr → Int
calc = fold calcsem testenv
```

Tree-oriented programming

```
data Expr
=
  Con Int
| Add Expr Expr
| Mul Expr Expr
| Var Name
```

Fields

```
type Sem b
=
( (Int  → b)
, (b → b → b)
, (b → b → b)
, (Name → b)
)

fold :: Sem b →
        Expr → b
```

```
calcsem :: Sem (Env → Int)
ca
( λ  e → n
, λx y → λe → x e + y e
, λx y → λe → x e * y e
, λs   → λe → lookup s e
)

calc :: Expr → Int
calc = fold calcsem testenv
```

Inherited attribute

Synthesized attribute

Tree-oriented programming

```
data Expr
=
  Con Int
| Add Expr Expr
| Mul Expr Expr
| Var Name
```

Fields

```
type Sem b
=
( (Int  → b)
, (b → b → b)
, (b → b → b)
, (Name → b)
)

fold :: Sem b →
        Expr → b
```

```
calcsem :: Sem (Env → Int)
c
( e → n
, λx y → λe → x e + y e
, λx y → λe → x e * y e
, λs   → λe → lookup s e
)

calc :: Expr → Int
calc = fold calcsem testenv
```

Inherited attribute

Synthesized attribute

Tree-oriented programming

$$
\begin{array}{l}
\textbf{data}\ \mathit{Expr} \\
= \\
\quad \mathit{Con}\ \ \mathit{con} : \mathit{Int} \\
\mid\ \mathit{Add}\ \ \mathit{lef} : \mathit{Expr}\ \ \mathit{rit} : \mathit{Expr} \\
\mid\ \mathit{Mul}\ \ \mathit{lef} : \mathit{Expr}\ \ \mathit{rit} : \mathit{Expr} \\
\mid\ \mathit{Var}\ \ \mathit{name} : \mathit{Name}
\end{array}
$$

Named fields

$$
\begin{array}{l}
\mathit{calcsem} :: \mathit{Sem}\ (\mathit{Env} \to \mathit{Int}) \\
\mathit{c} \\
(\ \lambda \quad \to \mathit{r} \\
,\ \lambda x\ y \to \lambda e \to x\ e + y\ e \\
,\ \boxed{\lambda x\ y \to \lambda e \to x\ e * y\ e} \\
,\ \lambda s \quad \to \lambda e \to \mathit{lookup}\ s\ e \\
)
\end{array}
$$

Inherited attribute

Synthesized attribute

Tree-oriented programming

$$
\begin{array}{l}
\textbf{data}\ \mathit{Expr} \\
= \\
\quad \mathit{Con}\ \ \mathit{con} : \mathit{Int} \\
\mid\ \mathit{Add}\ \ \mathit{lef} : \mathit{Expr}\ \ \mathit{rit} : \mathit{Expr} \\
\mid\ \mathit{Mul}\ \ \mathit{lef} : \mathit{Expr}\ \ \mathit{rit} : \mathit{Expr} \\
\mid\ \mathit{Var}\ \ \mathit{name} : \mathit{Name}
\end{array}
$$

Named fields

$$
\begin{array}{l}
\mathit{calcsem} :: \mathit{Sem}\ (\mathit{Env} \to \mathit{Int}) \\
\mathit{ca} \\
(\lambda \quad e \to n \\
, \lambda x\ y \to \lambda e \to x\ e + y\ e \\
, \boxed{\lambda x\ y \to \lambda e \to x\ e * y\ e} \\
, \lambda s \quad \to \lambda e \to \mathit{lookup}\ s\ e \\
)
\end{array}
$$

Inherited attribute

Synthesized attribute

Named attributes

$$
\begin{array}{l}
\textbf{attr}\ \mathit{Expr}\ \textbf{inh}\ \mathit{env} : \mathit{Env} \\
\qquad\qquad\quad \textbf{syn}\ \mathit{val} : \mathit{Int}
\end{array}
$$

Tree-oriented programming

```
data Expr
=
  Con  con : Int
| Add  lef : Expr  rit : Expr
| Mul  lef : Expr  rit : Expr
| Var  name : Name
```

Named fields

```
calcsem :: Sem (Env → Int)
c
( λ e → r
, λx y → λe → x e | y e
, λx y → λe → x e ∗ y e
, λs   → λe → lookup s e
)
```

Inherited attribute

Synthesized attribute

Named attributes

```
attr Expr inh env : Env
          syn val : Int
```

```
sem Expr | Mul lhs.val = @lef.val ∗ @rit.val
               lef.env = @lhs.env
               rit.env = @lhs.env
```

Attribute Grammar processor

UUAG Attribute Grammar preprocessor lets you

- have named fields and attributes
- define semantics by defining attributes

and automatically

- generates the *fold*-function
- generates the semantic functions to instantiate it
- inserts trivial rules

AG applied in UHC

Desired Core transformation:

$$\begin{array}{c} \textbf{let } y = z \textbf{ in} \\ \textbf{let } x = y \textbf{ in} \\ x + y \end{array} \quad \rightarrow \quad \begin{array}{c} \textbf{let } y = z \textbf{ in} \\ \textbf{let } x = y \textbf{ in} \\ z + z \end{array}$$

Inline name aliases

AG applied in UHC

Desired Core transformation:

$$\begin{array}{c} \textbf{let } y = z \textbf{ in} \\ \textbf{let } x = y \textbf{ in} \\ x + y \end{array} \quad \rightarrow \quad \begin{array}{c} \textbf{let } y = z \textbf{ in} \\ \textbf{let } x = y \textbf{ in} \\ z + z \end{array}$$

Inline name aliases

- Gather introduced bindings bottom up
- Distribute gathered bindings top down
- Compute transformed tree bottom up, variable occurrences possibly replaced

Example Core transformation

$$\textbf{data}\ \mathit{Expr} = \mathit{Var}\ \mathit{nm} : \mathit{Name}$$

Example Core transformation

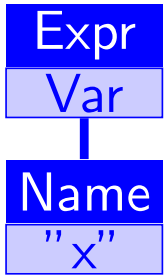

data *Expr* = *Var nm* : *Name*

Example Core transformation

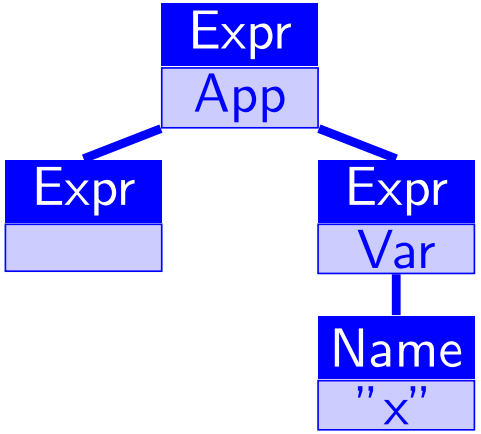

$$\begin{aligned}\textbf{data}\ \mathit{Expr} = {} & \mathit{Var}\ \mathit{nm} : \mathit{Name} \\ \mid\ & \mathit{App}\ f : \mathit{Expr}\ a : \mathit{Expr}\end{aligned}$$

Example Core transformation

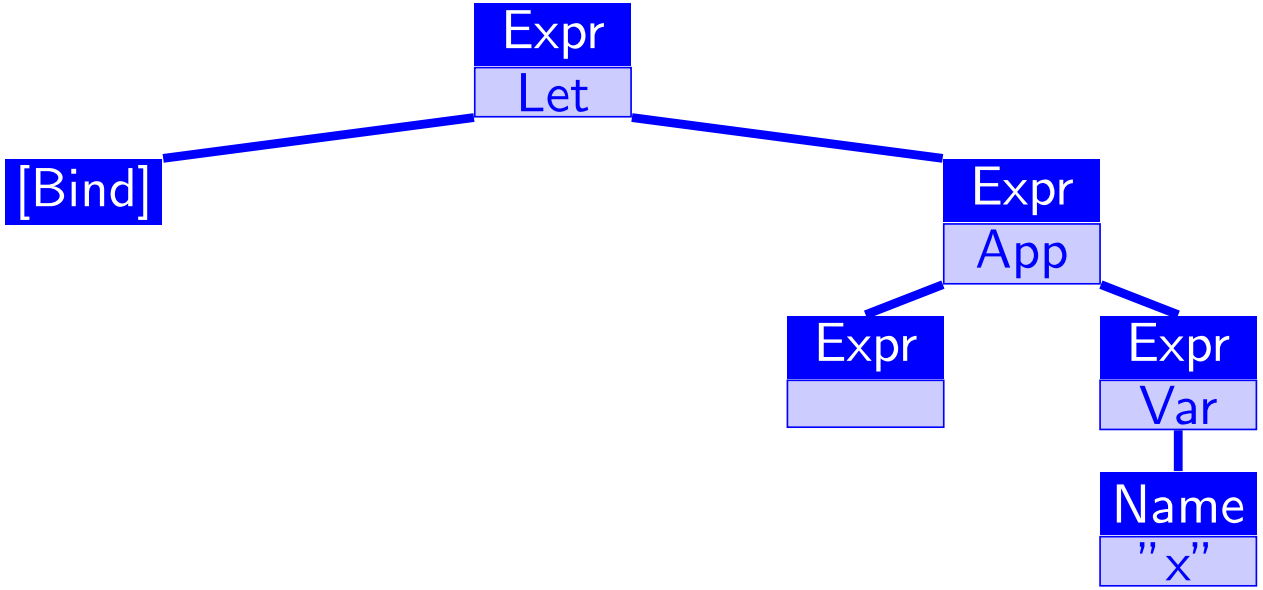

$$
\begin{aligned}
\textbf{data}\ Expr = \ & Var\ nm : Name \\
\mid\ & App\ f : Expr\ a : Expr \\
\mid\ & Let\ defs : [Bind]\ body : Expr
\end{aligned}
$$

Example Core transformation

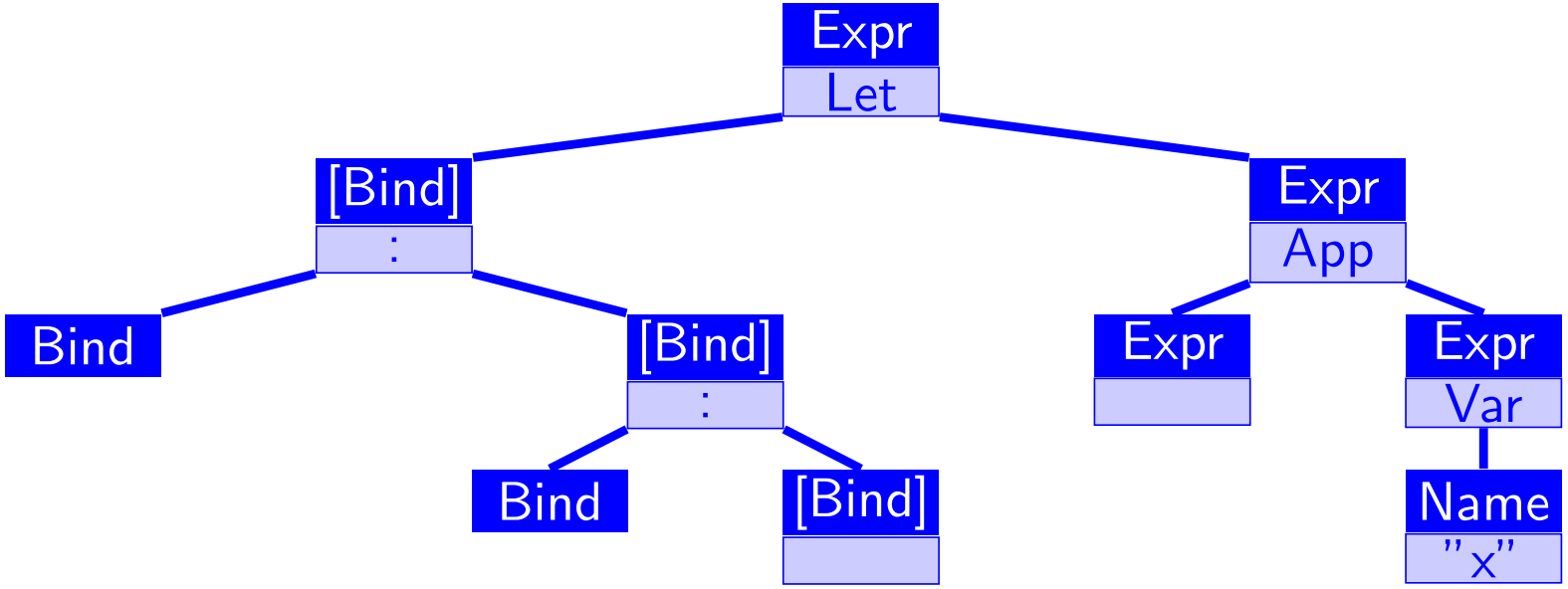

$$
\begin{aligned}
\textbf{data}\ \mathit{Expr} = \ & \mathit{Var}\ \mathit{nm} : \mathit{Name} \\
\mid\ & \mathit{App}\ f : \mathit{Expr}\ a : \mathit{Expr} \\
\mid\ & \mathit{Let}\ \mathit{defs} : [\mathit{Bind}]\ \mathit{body} : \mathit{Expr}
\end{aligned}
$$

Example Core transformation

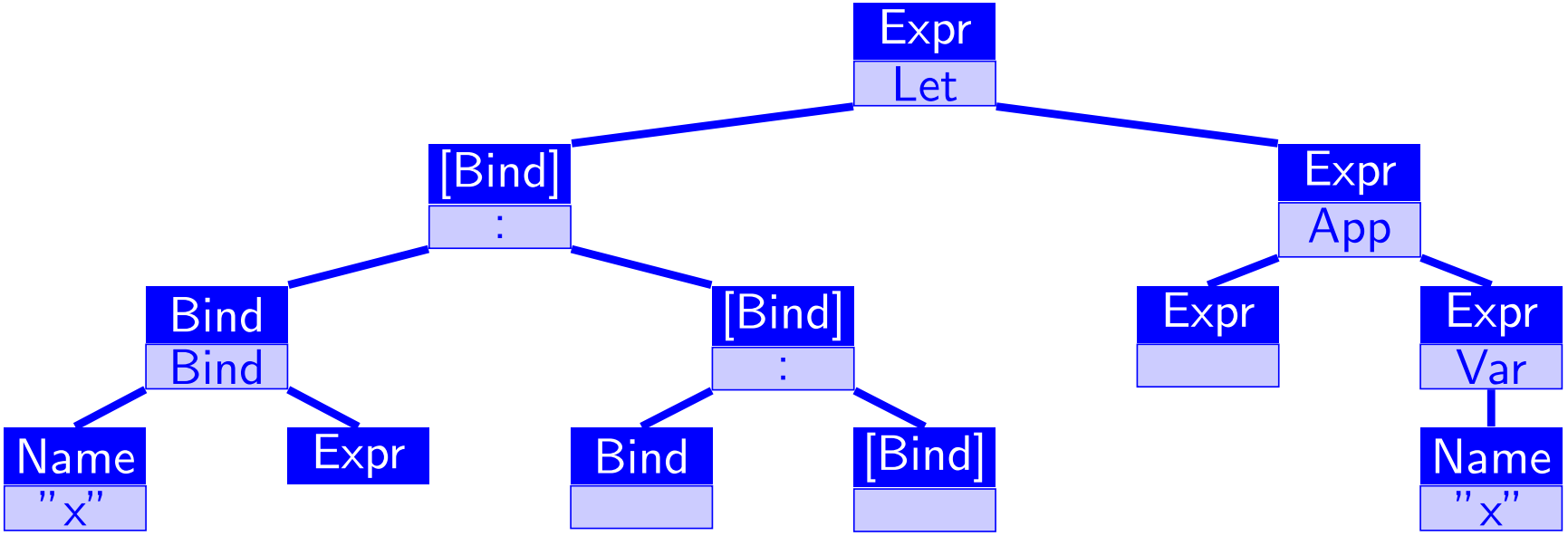

$$
\begin{aligned}
\textbf{data}\ \mathit{Expr} &= \mathit{Var}\ \mathit{nm} : \mathit{Name} \\
&\mid \mathit{App}\ f : \mathit{Expr}\ a : \mathit{Expr} \\
&\mid \mathit{Let}\ \mathit{defs} : [\mathit{Bind}]\ \mathit{body} : \mathit{Expr} \\
\textbf{data}\ \mathit{Bind} &= \mathit{Bind}\ \mathit{Name}\ \mathit{Expr}
\end{aligned}
$$

Example Core transformation

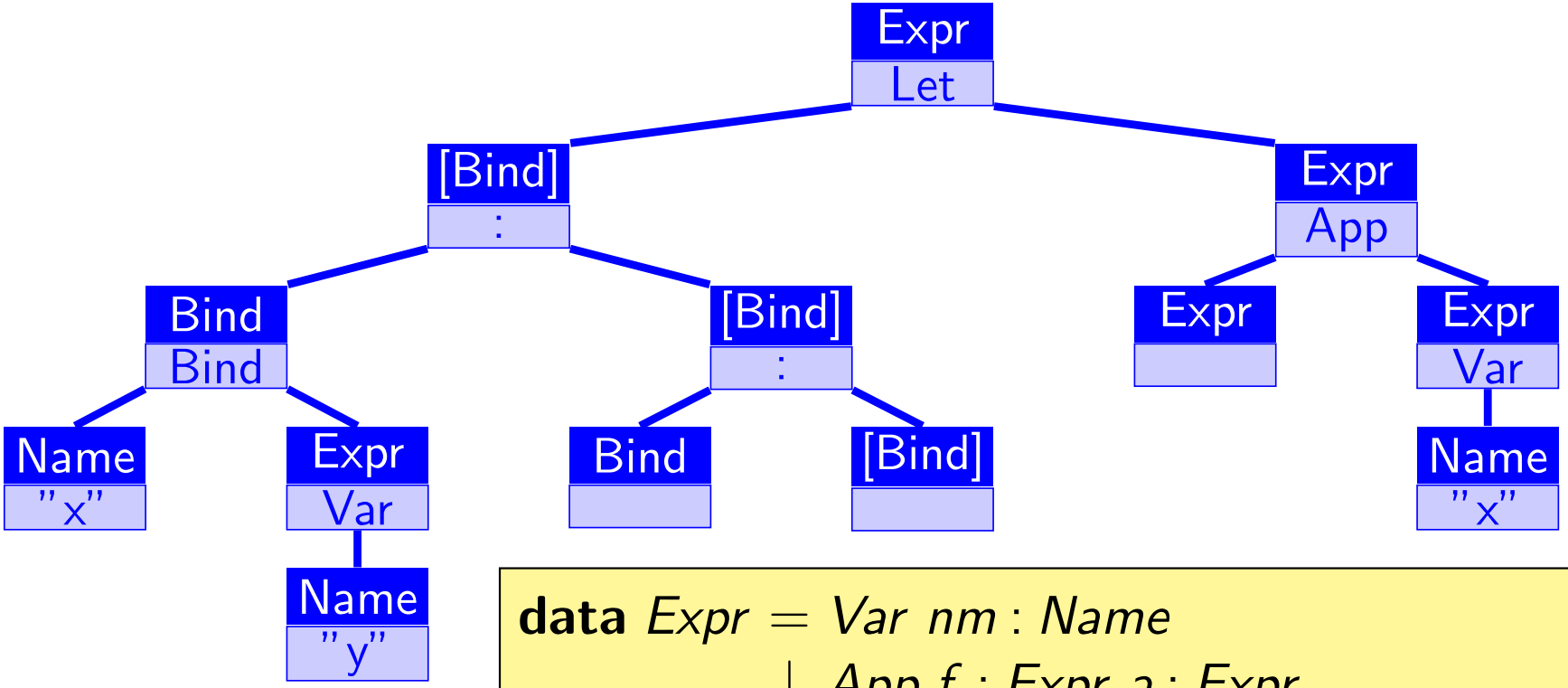

$$
\begin{aligned}
\textbf{data}\ \mathit{Expr} &= \mathit{Var}\ \mathit{nm} : \mathit{Name} \\
&\mid \mathit{App}\ f : \mathit{Expr}\ a : \mathit{Expr} \\
&\mid \mathit{Let}\ \mathit{defs} : [\mathit{Bind}]\ \mathit{body} : \mathit{Expr} \\
\textbf{data}\ \mathit{Bind} &= \mathit{Bind}\ \mathit{Name}\ \mathit{Expr}
\end{aligned}
$$

Example Core transformation: Name alias

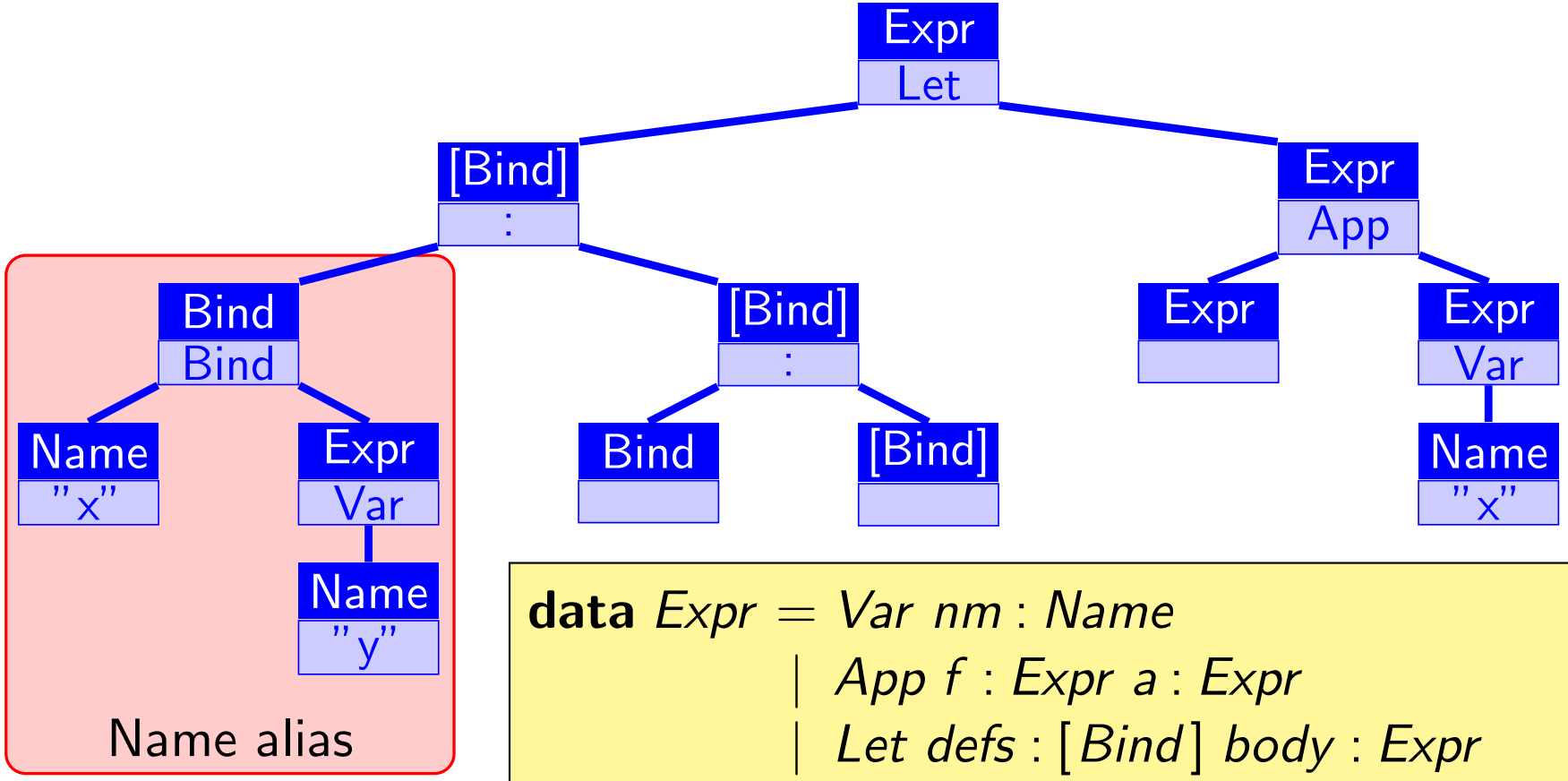

$$
\begin{aligned}
\textbf{data}\ \mathit{Expr} &= \mathit{Var}\ \mathit{nm} : \mathit{Name} \\
&\mid \mathit{App}\ \mathit{f} : \mathit{Expr}\ \mathit{a} : \mathit{Expr} \\
&\mid \mathit{Let}\ \mathit{defs} : [\mathit{Bind}]\ \mathit{body} : \mathit{Expr} \\
\textbf{data}\ \mathit{Bind} &= \mathit{Bind}\ \mathit{Name}\ \mathit{Expr}
\end{aligned}
$$

Example Core transformation: Name alias inlining

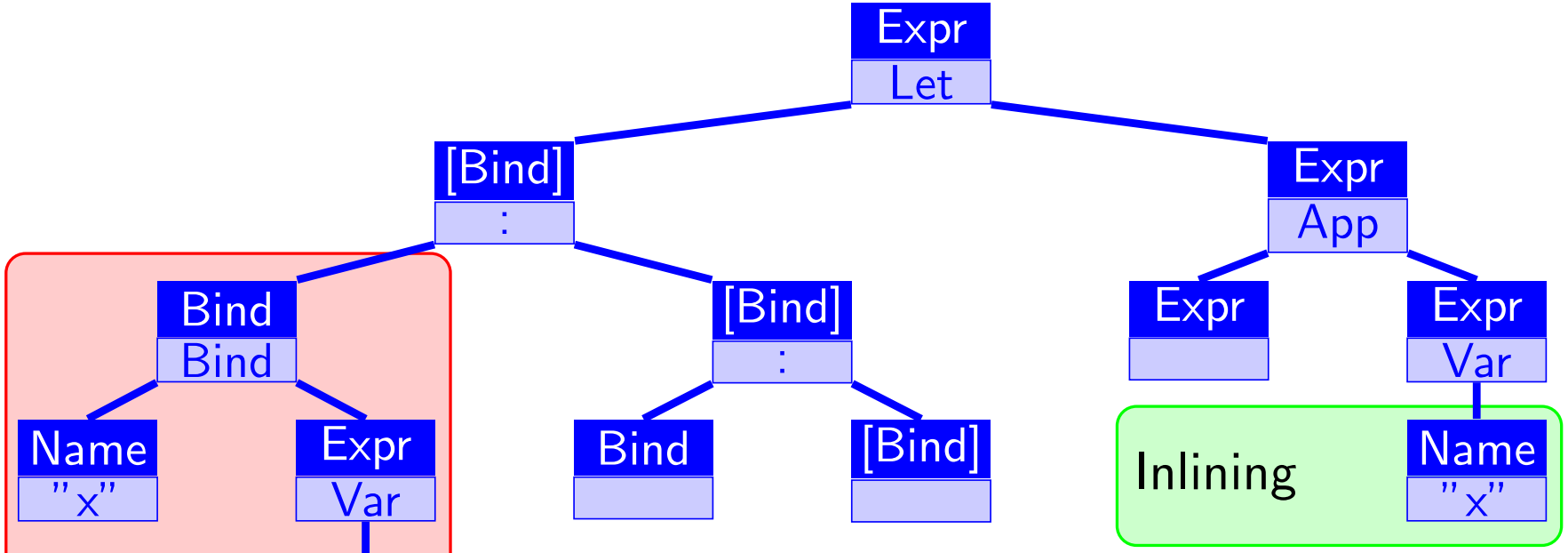

$$
\begin{aligned}
\textbf{data}\ \mathit{Expr} &= \mathit{Var}\ \mathit{nm} : \mathit{Name} \\
&\mid \mathit{App}\ f : \mathit{Expr}\ a : \mathit{Expr} \\
&\mid \mathit{Let}\ \mathit{defs} : [\mathit{Bind}]\ \mathit{body} : \mathit{Expr} \\
\textbf{data}\ \mathit{Bind} &= \mathit{Bind}\ \mathit{Name}\ \mathit{Expr}
\end{aligned}
$$

Example Core transformation: Name alias inlining

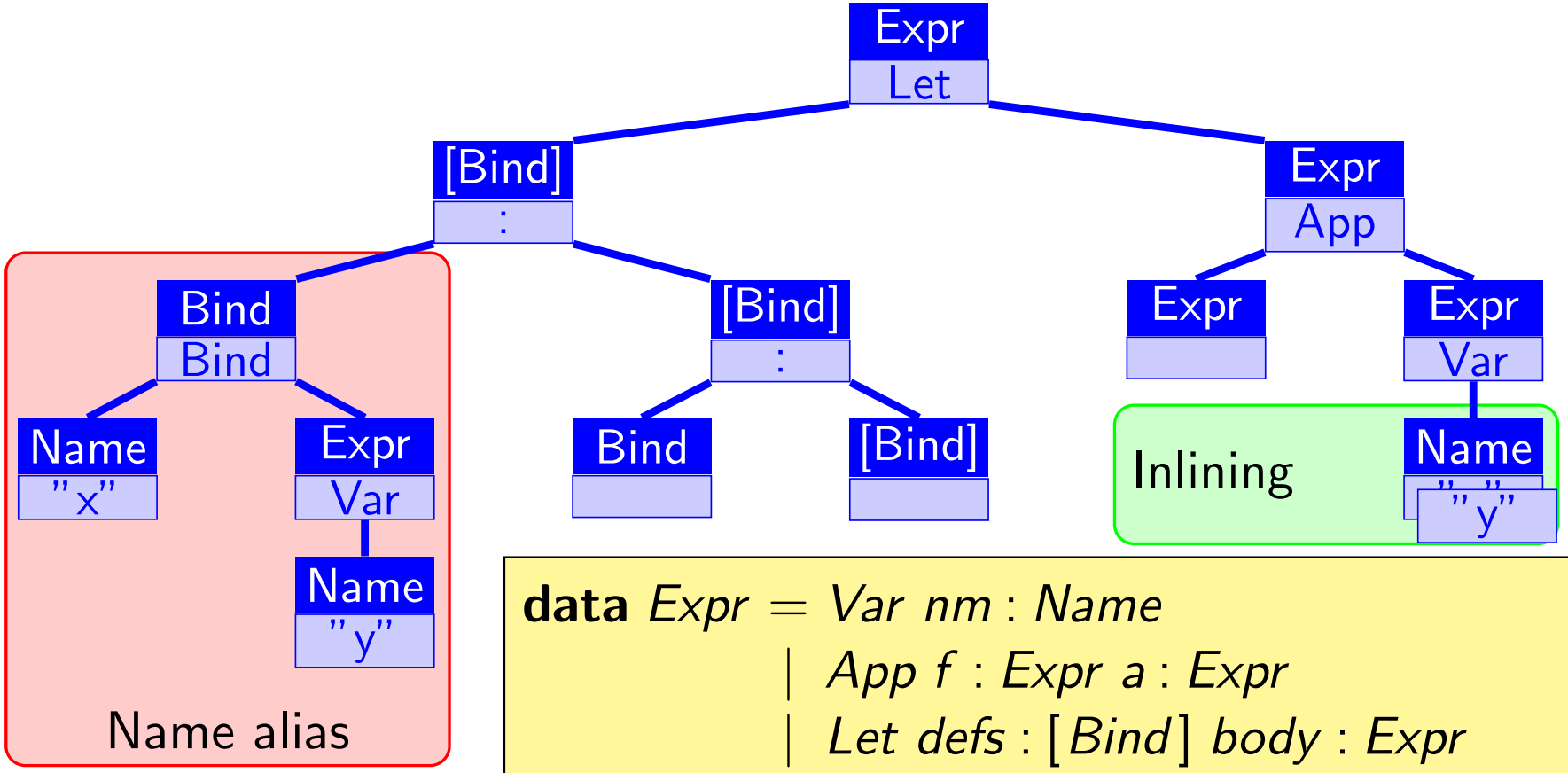

$$
\begin{aligned}
\textbf{data}\ \mathit{Expr} &= \mathit{Var}\ \mathit{nm} : \mathit{Name} \\
&\mid \mathit{App}\ f : \mathit{Expr}\ a : \mathit{Expr} \\
&\mid \mathit{Let}\ \mathit{defs} : [\mathit{Bind}]\ \mathit{body} : \mathit{Expr} \\
\textbf{data}\ \mathit{Bind} &= \mathit{Bind}\ \mathit{Name}\ \mathit{Expr}
\end{aligned}
$$

Example Core transformation: Name alias inlining

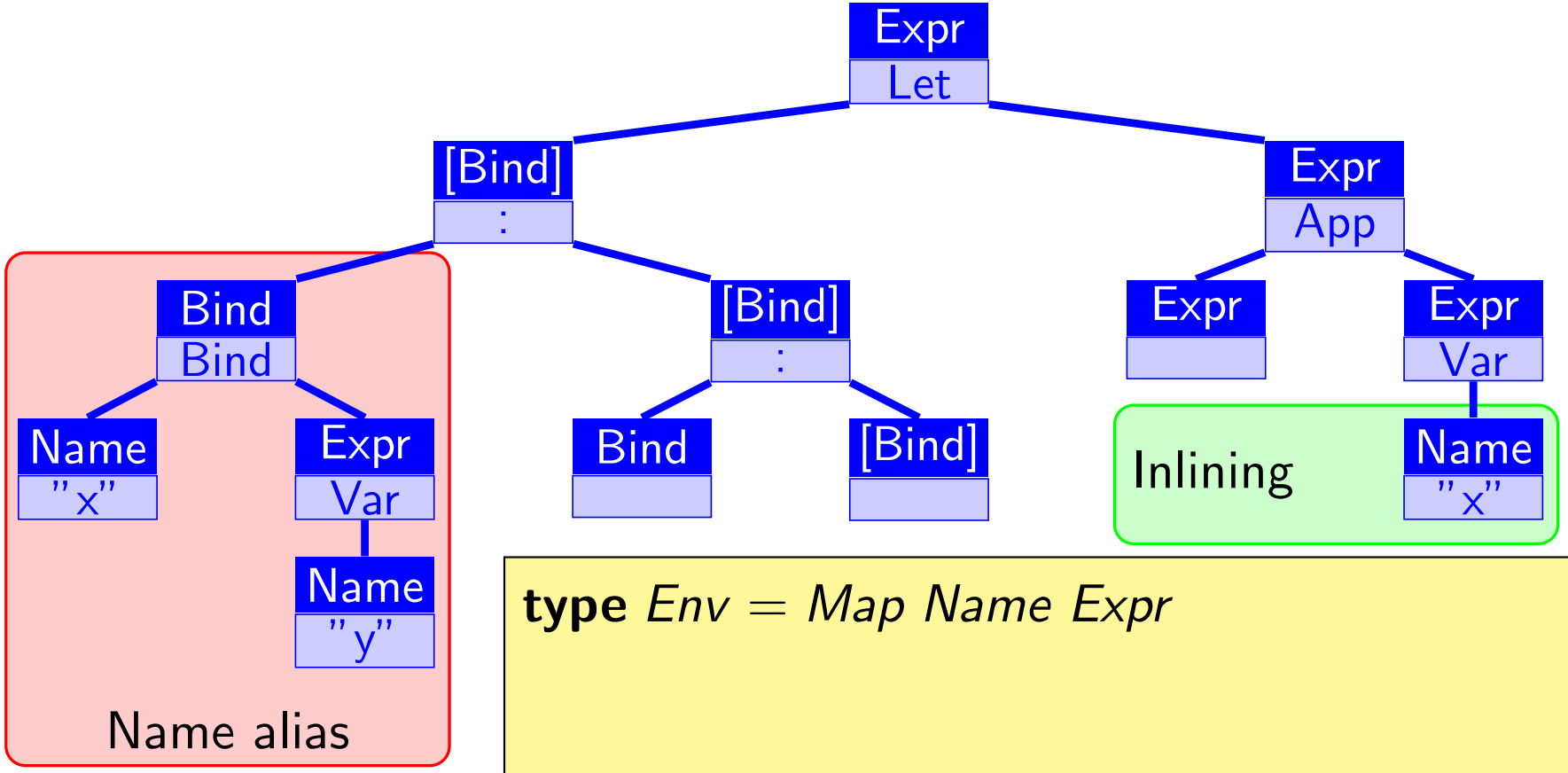

type *Env* = *Map Name Expr*

Example Core transformation: Name alias inlining

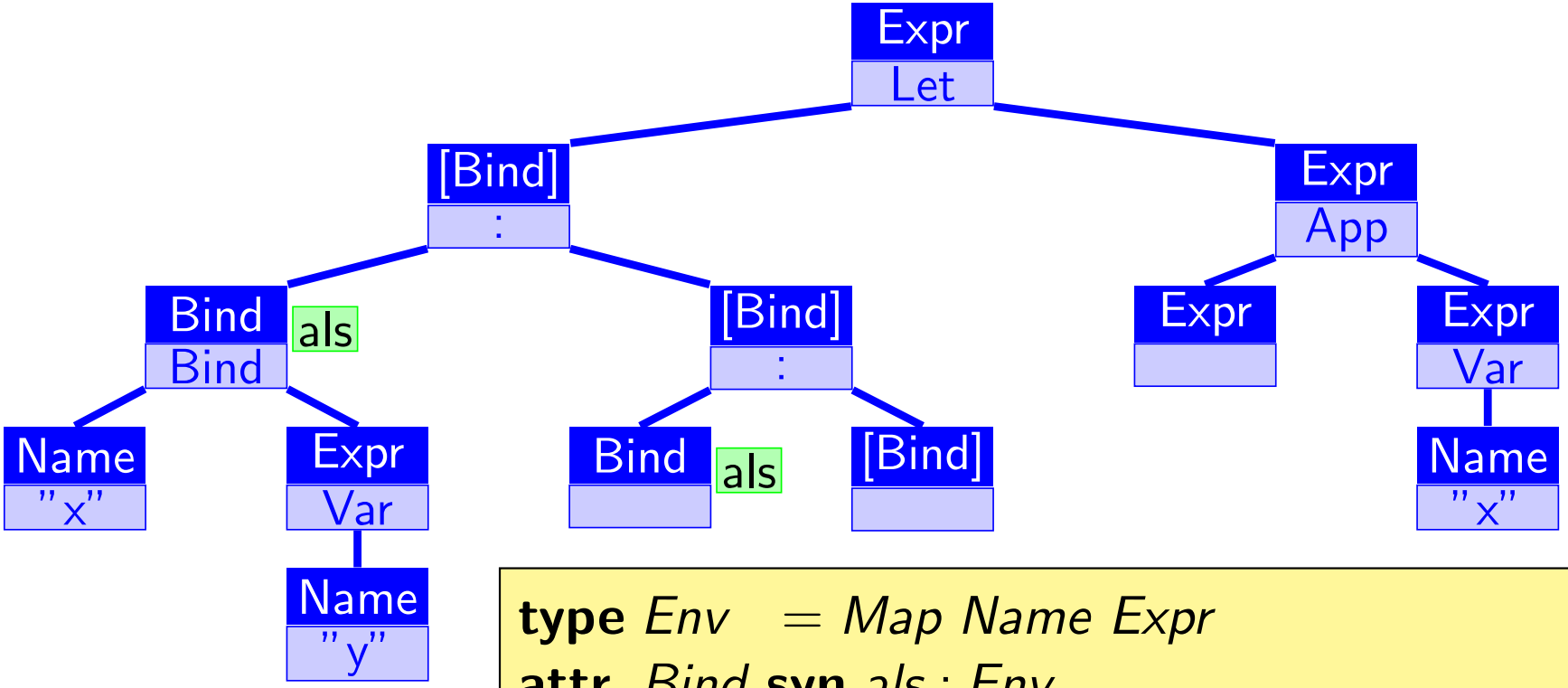

type *Env* $= Map\ Name\ Expr$
attr *Bind* **syn** *als* : *Env*

Example Core transformation: Name alias inlining

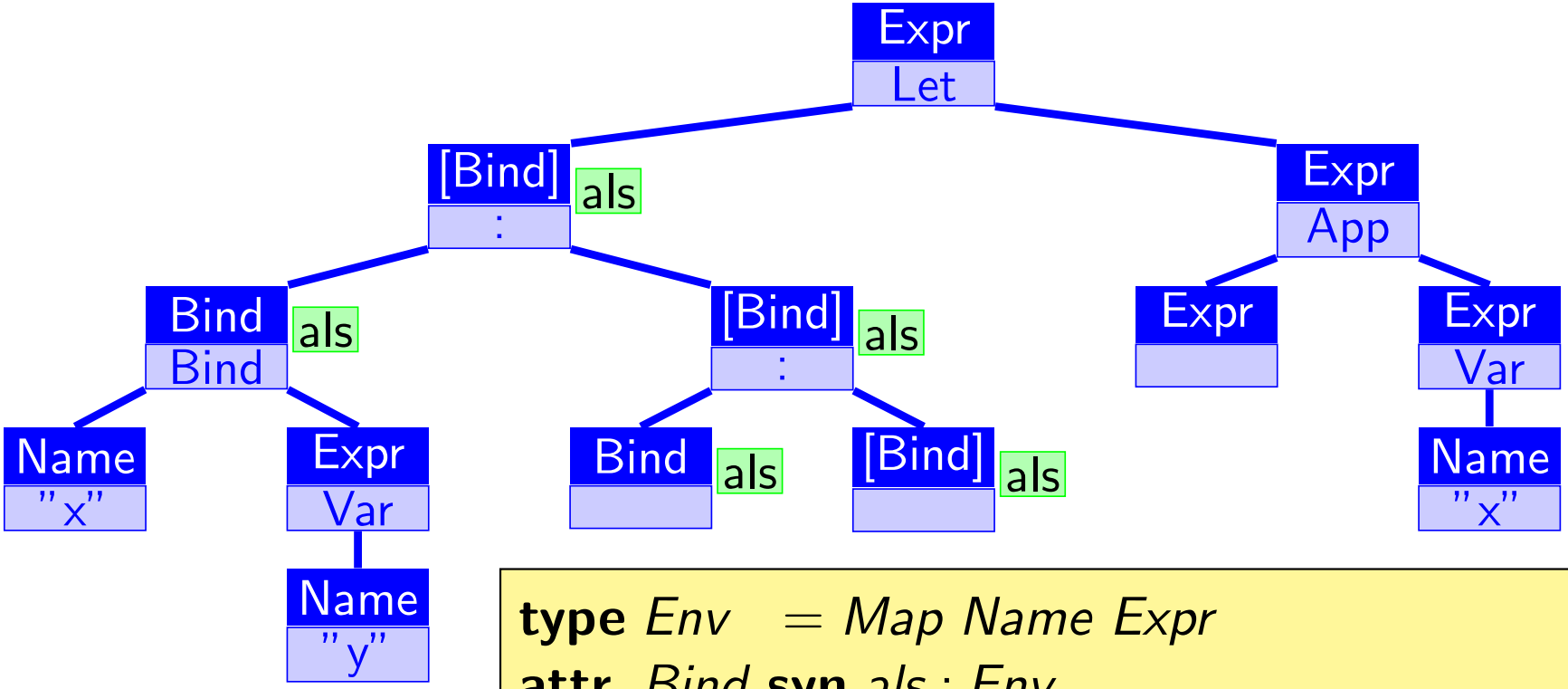

type *Env* $= \mathit{Map\ Name\ Expr}$
attr *Bind* **syn** *als* : *Env*
attr [*Bind*] **syn** *als* : *Env*

Example Core transformation: Name alias inlining

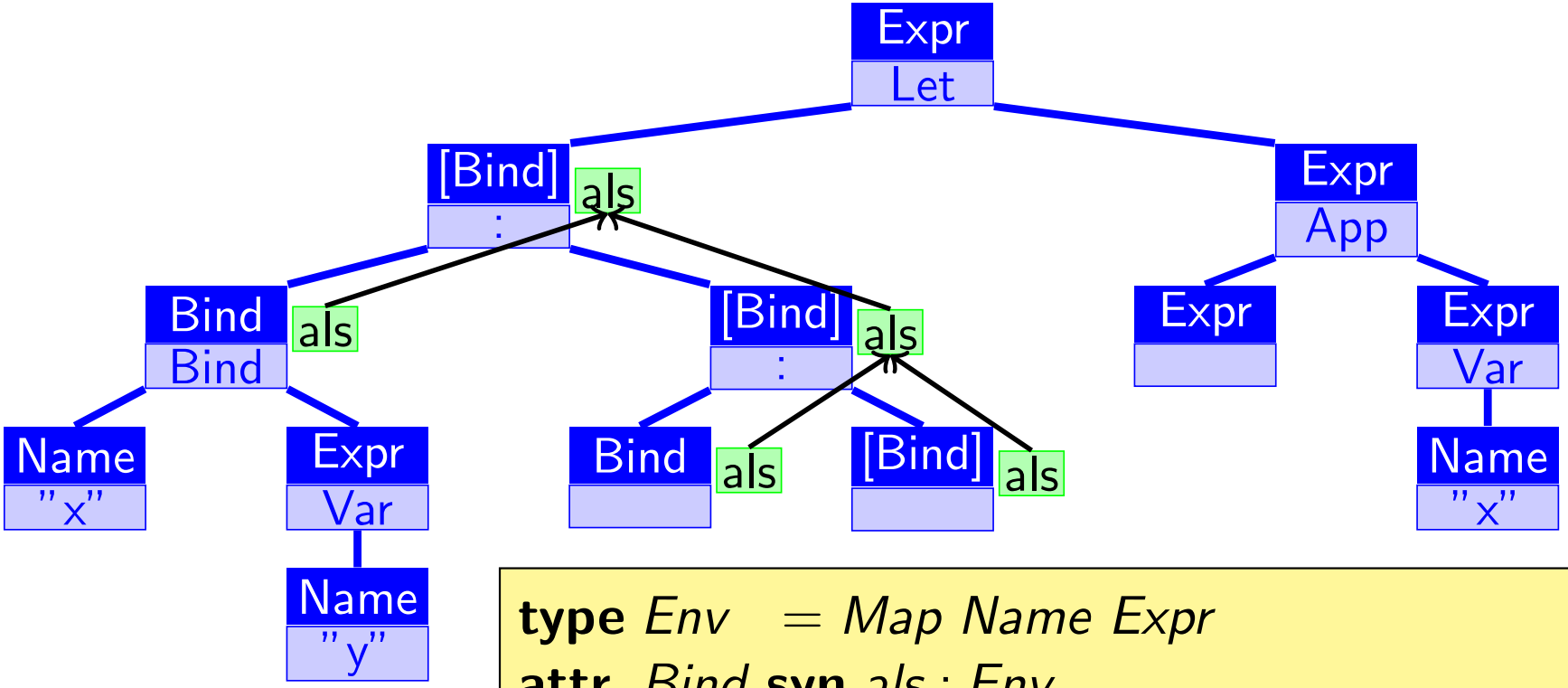

type *Env* $= \mathit{Map\ Name\ Expr}$
attr *Bind* **syn** *als* : *Env*
attr [*Bind*] **syn** *als* **use** $\{\cup\}$ $\{\emptyset\}$: *Env*

Example Core transformation: Name alias inlining

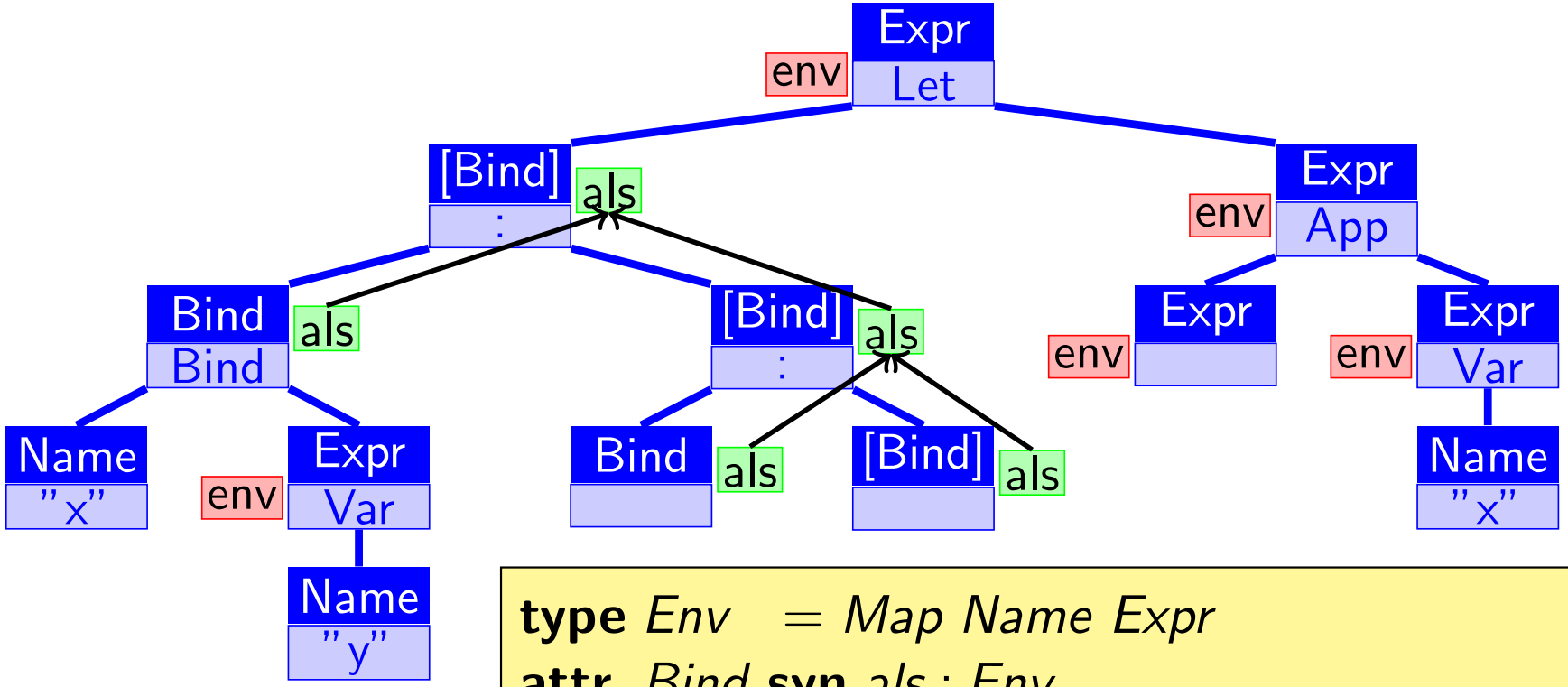

type *Env* $= \mathit{Map\ Name\ Expr}$
attr *Bind* **syn** *als* : *Env*
attr [*Bind*] **syn** *als* **use** $\{\cup\}$ $\{\emptyset\}$: *Env*
attr *Expr* **inh** *env* : *Env*

Example Core transformation: Name alias inlining

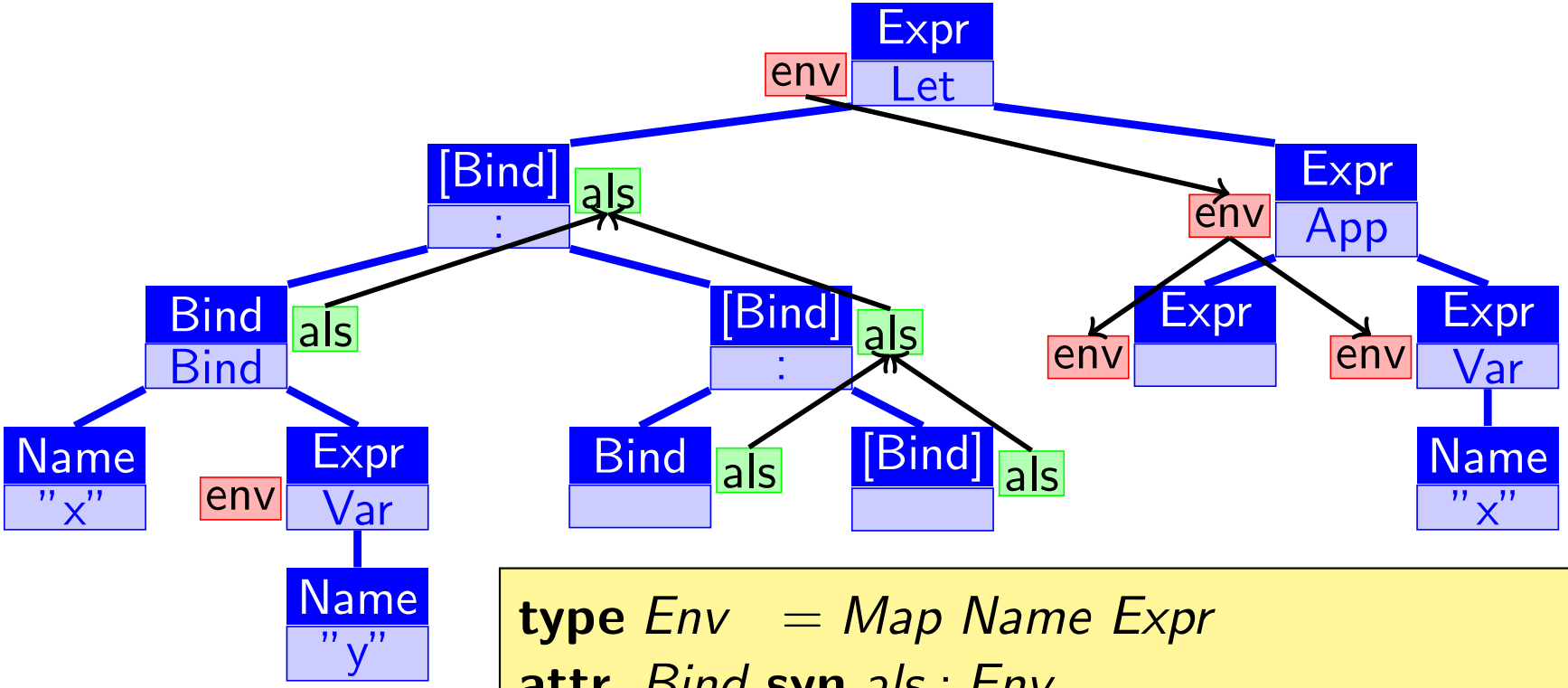

type *Env* $= \mathit{Map\ Name\ Expr}$
attr *Bind* **syn** *als* : *Env*
attr [*Bind*] **syn** *als* **use** $\{\cup\}$ $\{\emptyset\}$: *Env*
attr *Expr* **inh** *env* : *Env*

Example Core transformation: Name alias inlining

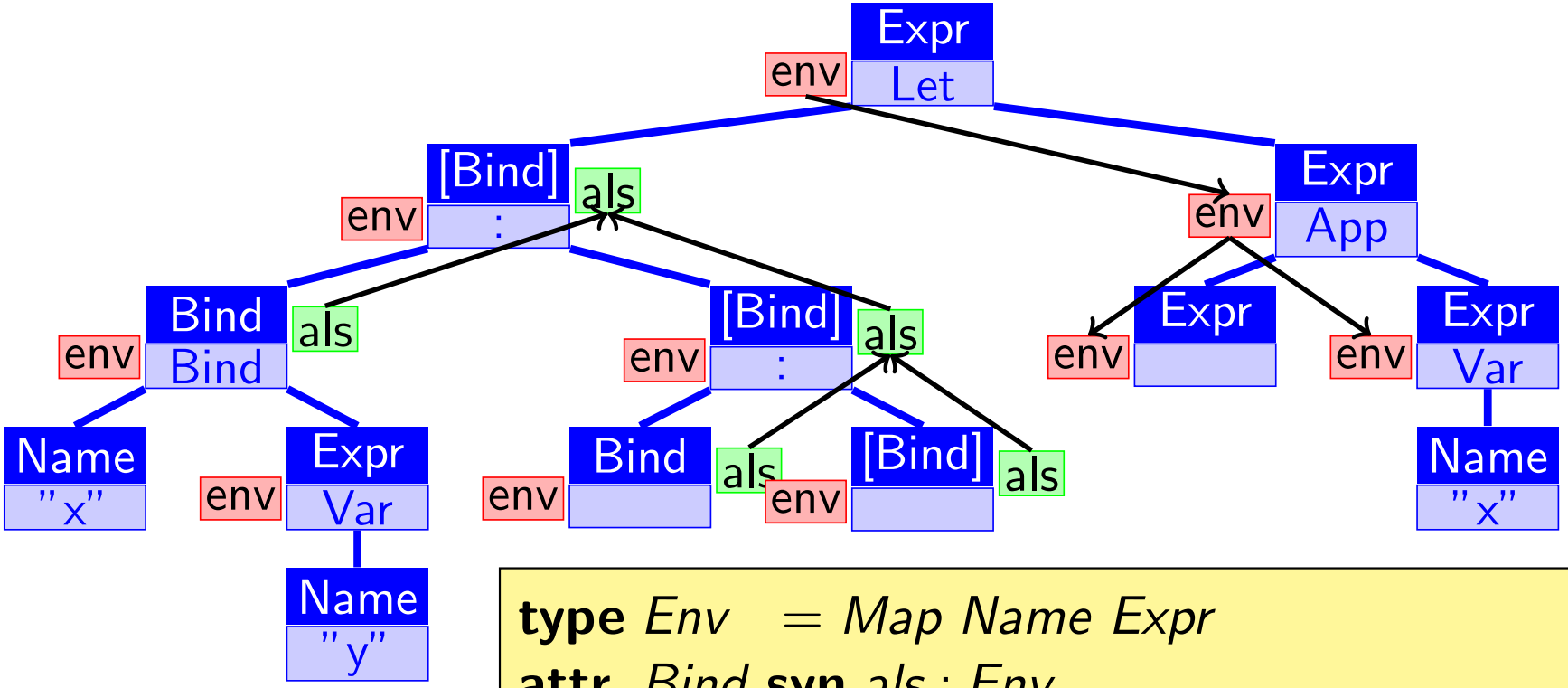

type *Env* $= \mathit{Map\ Name\ Expr}$
attr *Bind* **syn** *als* : *Env*
attr [*Bind*] **syn** *als* **use** $\{\cup\}$ $\{\emptyset\}$: *Env*
attr *Expr* **inh** *env* : *Env*
attr *Bind* [*Bind*] **inh** *env* : *Env*

Example Core transformation: Name alias inlining

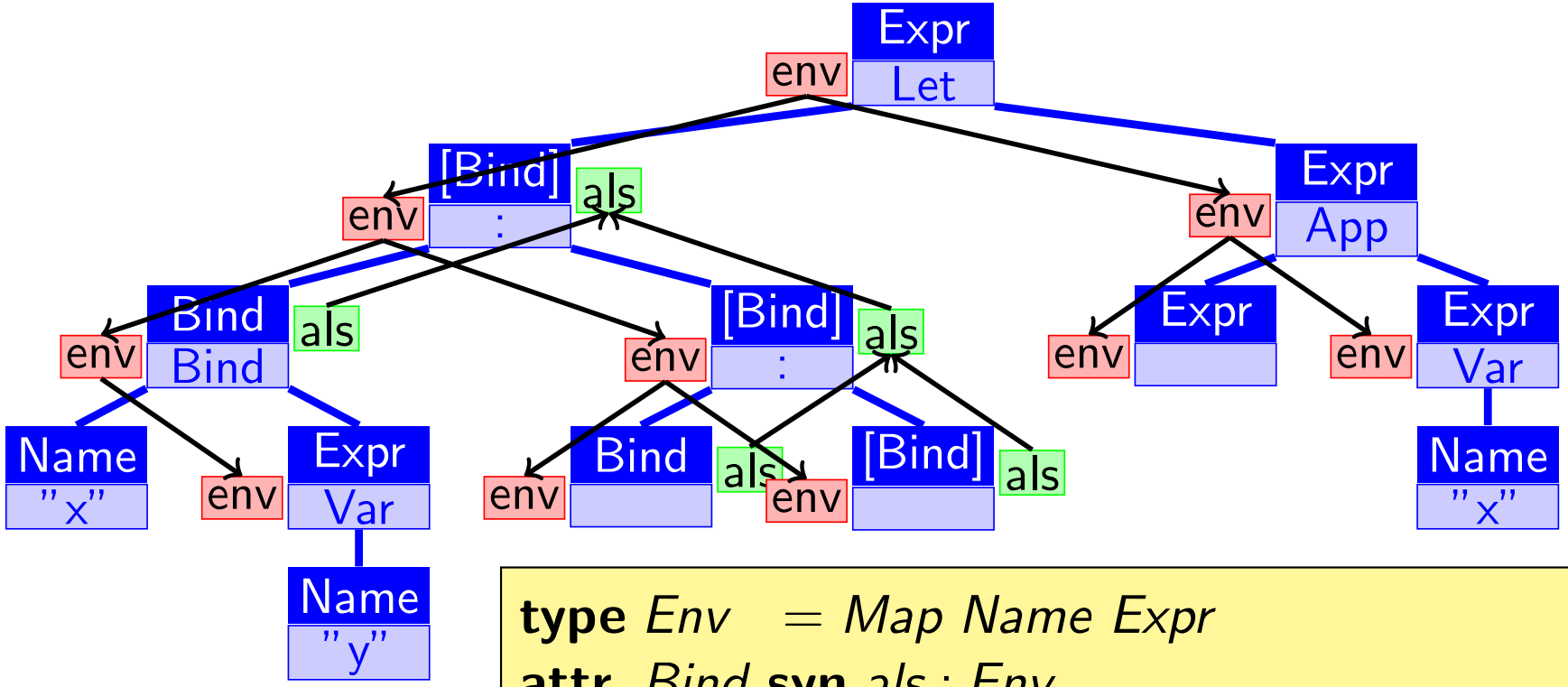

type *Env* $= \mathit{Map\ Name\ Expr}$
attr *Bind* **syn** *als* : *Env*
attr [*Bind*] **syn** *als* **use** $\{\cup\}$ $\{\emptyset\}$: *Env*
attr *Expr* **inh** *env* : *Env*
attr *Bind* [*Bind*] **inh** *env* : *Env*

Example Core transformation: Name alias inlining

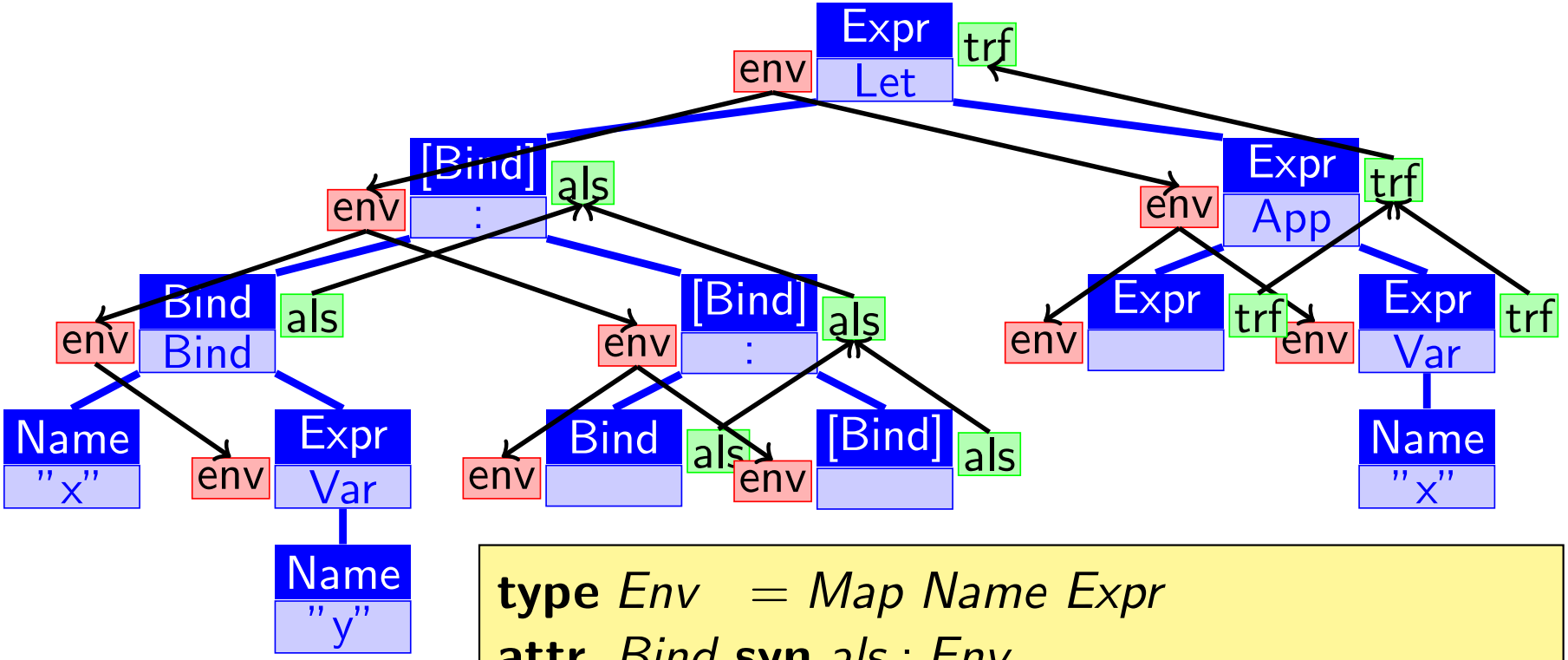

type *Env* $= Map\ Name\ Expr$
attr *Bind* **syn** *als* : *Env*
attr [*Bind*] **syn** *als* **use** $\{\cup\}$ $\{\emptyset\}$: *Env*
attr *Expr* **inh** *env* : *Env*
attr *Bind* [*Bind*] **inh** *env* : *Env*
attr *Expr Bind* [*Bind*] **syn** *trf* : **self**

Example Core transformation: Name alias inlining

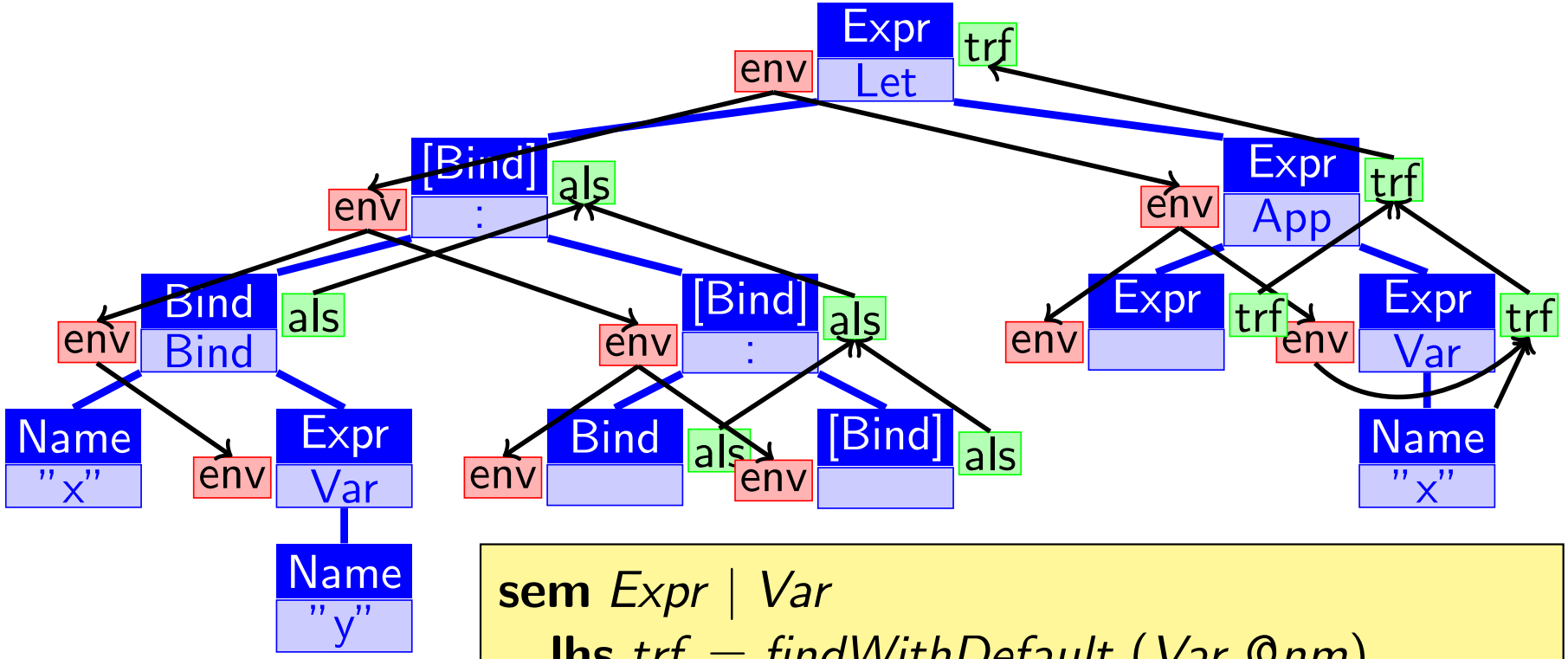

sem *Expr* | *Var*

lhs.*trf* = *findWithDefault* (*Var* @*nm*)
@*nm*
@**lhs**.*env*

Example Core transformation: Name alias inlining

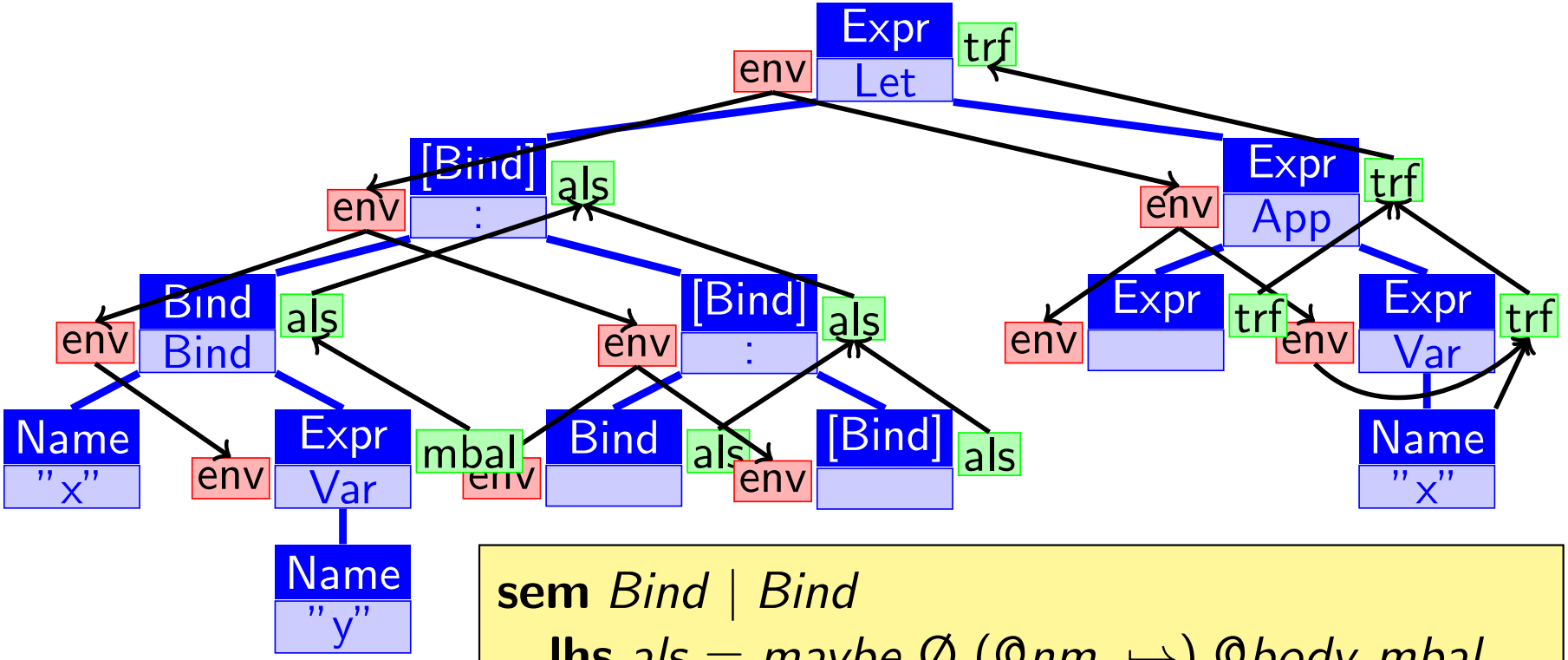

sem *Bind* | *Bind*

lhs.*als* = *maybe* ∅ (@*nm* ↦) @*body*.*mbal*

Example Core transformation: Name alias inlining

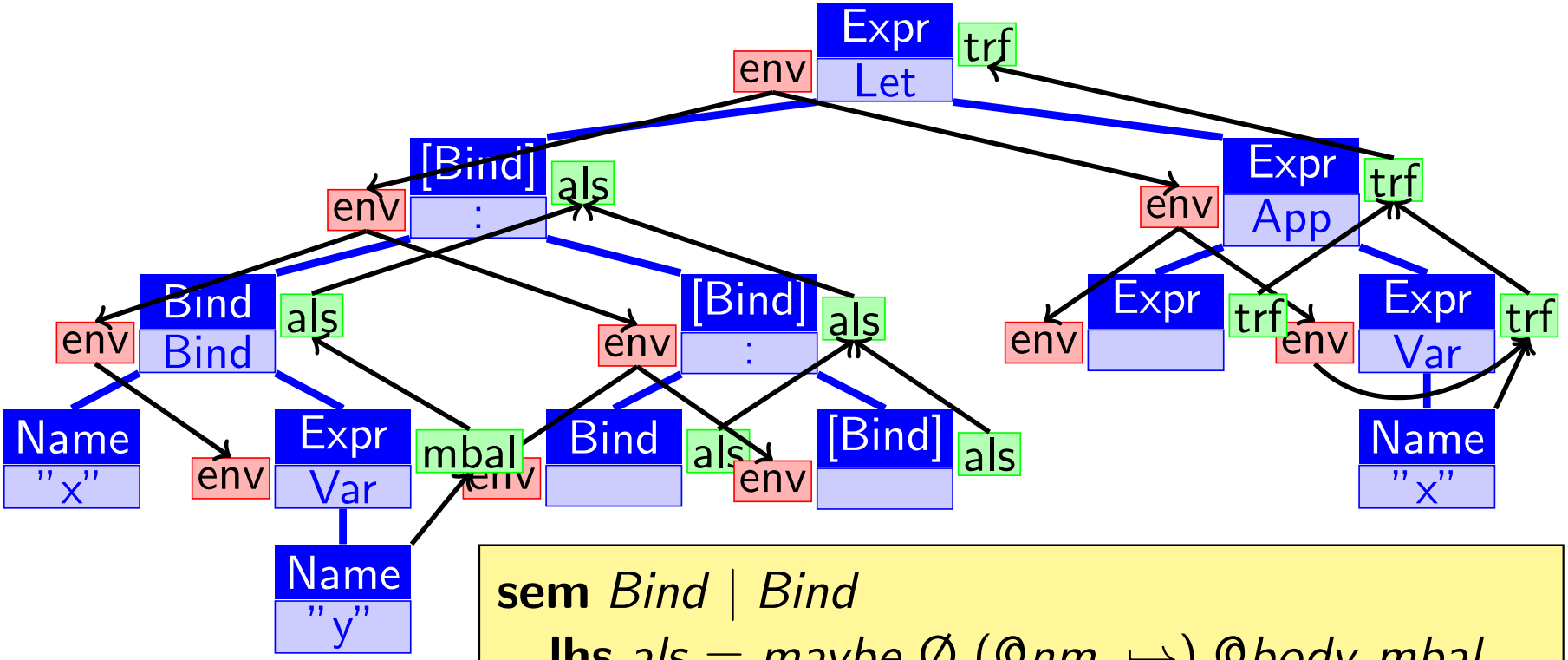

sem *Bind* | *Bind*

  lhs.*als* = *maybe* ∅ (@*nm* ↦) @*body*.*mbal*

attr *Expr* **syn** *mbal* : *Maybe Expr*

sem *Expr* | *Var*

  lhs.*mbal* = *Just* (*Var* @*nm*)

Example Core transformation: Name alias inlining

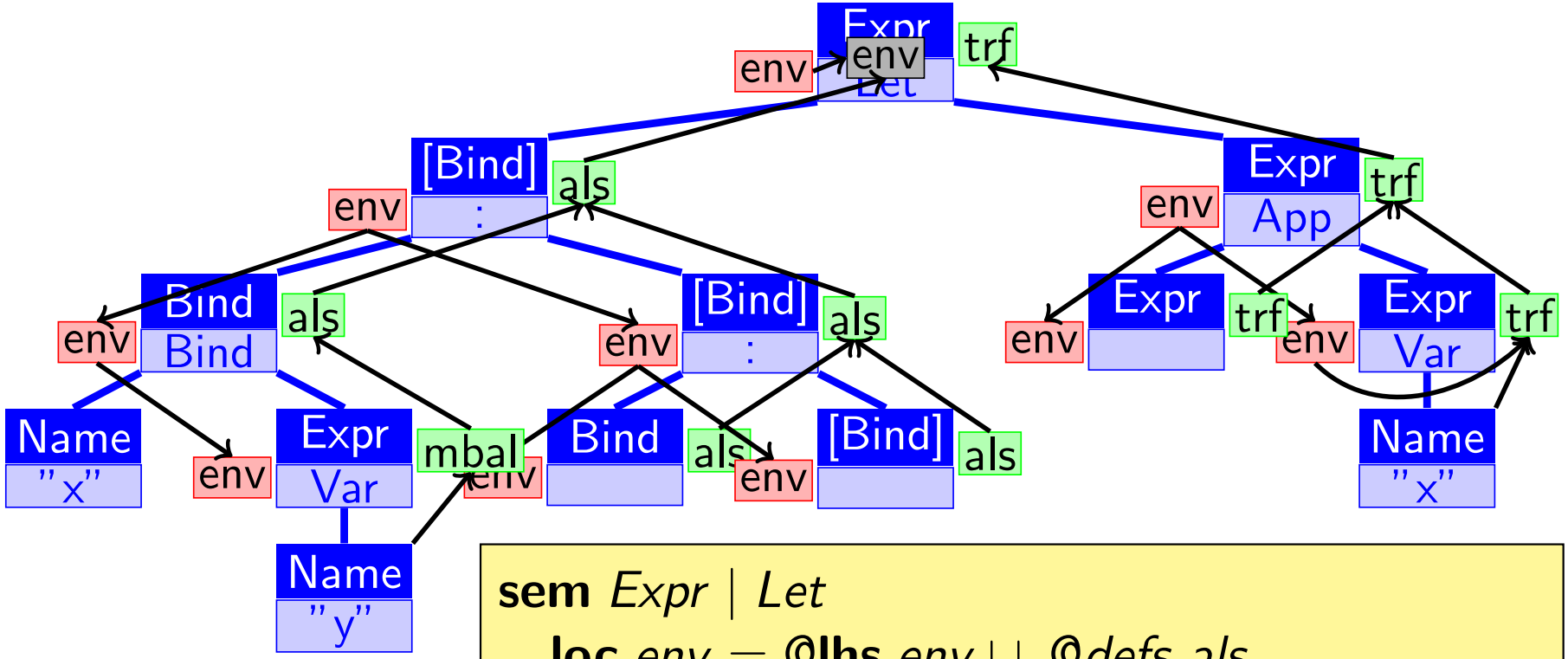

sem *Expr* | *Let*

loc.*env* = @**lhs**.*env* ∪ @*defs*.*als*

Example Core transformation: Name alias inlining

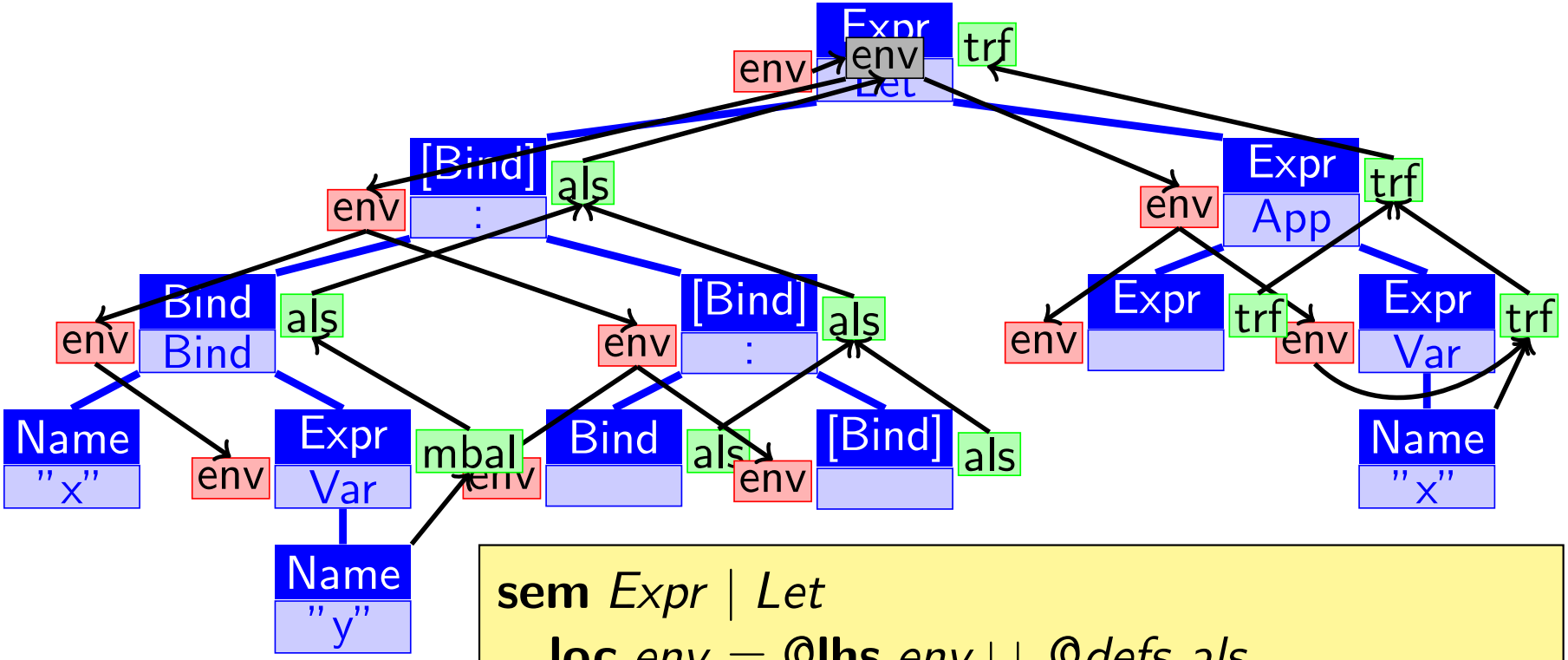

sem *Expr* | *Let*

loc.*env* = @**lhs**.*env* ∪ @*defs*.*als*

Multi-pass tree traversal

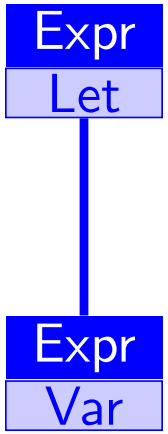

Name alias inlining is a two-pass traversal:

- First pass
- Second pass

Multi-pass tree traversal

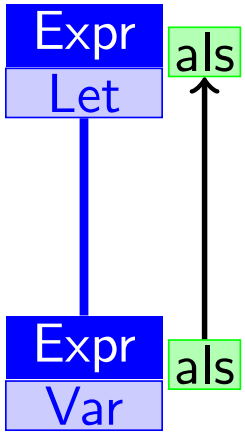

Name alias inlining is a two-pass traversal:

- First pass
  Bottom-up gather *aliases*
- Second pass

Multi-pass tree traversal

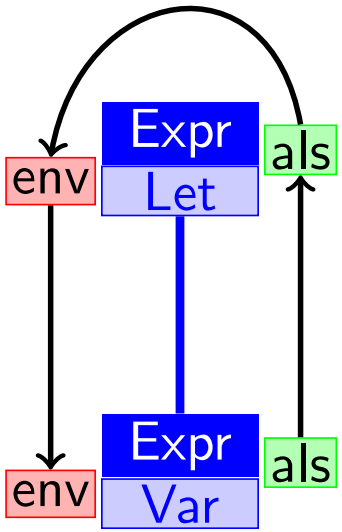

Name alias inlining is a two-pass traversal:

- First pass
  Bottom-up gather *aliases*
- Second pass
  Top-down distribute *environment*

Multi-pass tree traversal

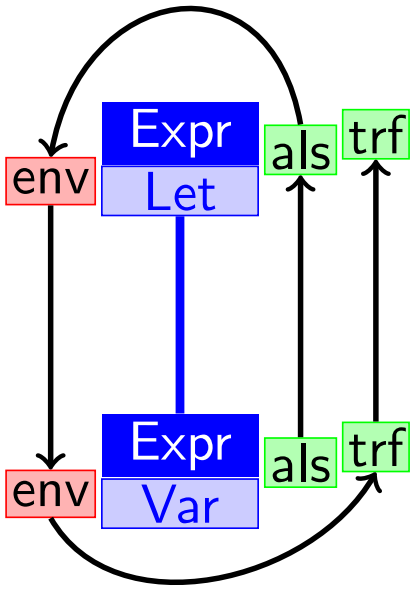

Name alias inlining is a two-pass traversal:

- First pass
  Bottom-up gather *aliases*
- Second pass
  Top-down distribute *environment*
  Bottom-up generate *transformed tree*

Multi-pass tree traversal

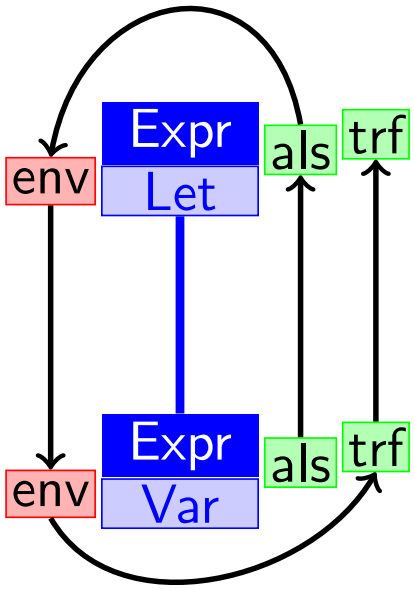

Name alias inlining is a two-pass traversal:

- First pass
  Bottom-up gather *aliases*
- Second pass
  Top-down distribute *environment*
  Bottom-up generate *transformed tree*

Either rely on lazyness
Or let UUAG schedule the passes
(and do cycle check)

Project status

Status of the Essential Haskell Compiler

- Available on `www.cs.uu.nl/wiki/Ehc`

Project status

Status of the Essential Haskell Compiler

- Available on `www.cs.uu.nl/wiki/Ehc`
- 85000 lines of code,
  half of which in AG

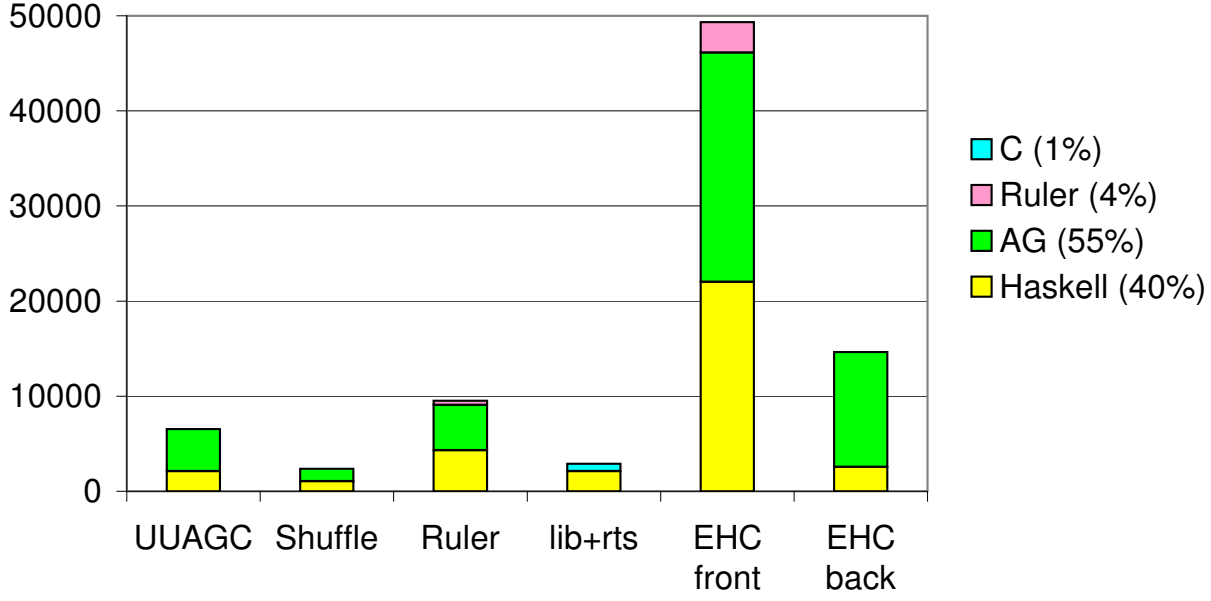

Project status

Status of the Essential Haskell Compiler

- Available on `www.cs.uu.nl/wiki/Ehc`
- 85000 lines of code, half of which in AG
- Working towards full Haskell with full prelude
- Simple programs compile and run
  - as interpreted bytecode
  - as compiled code

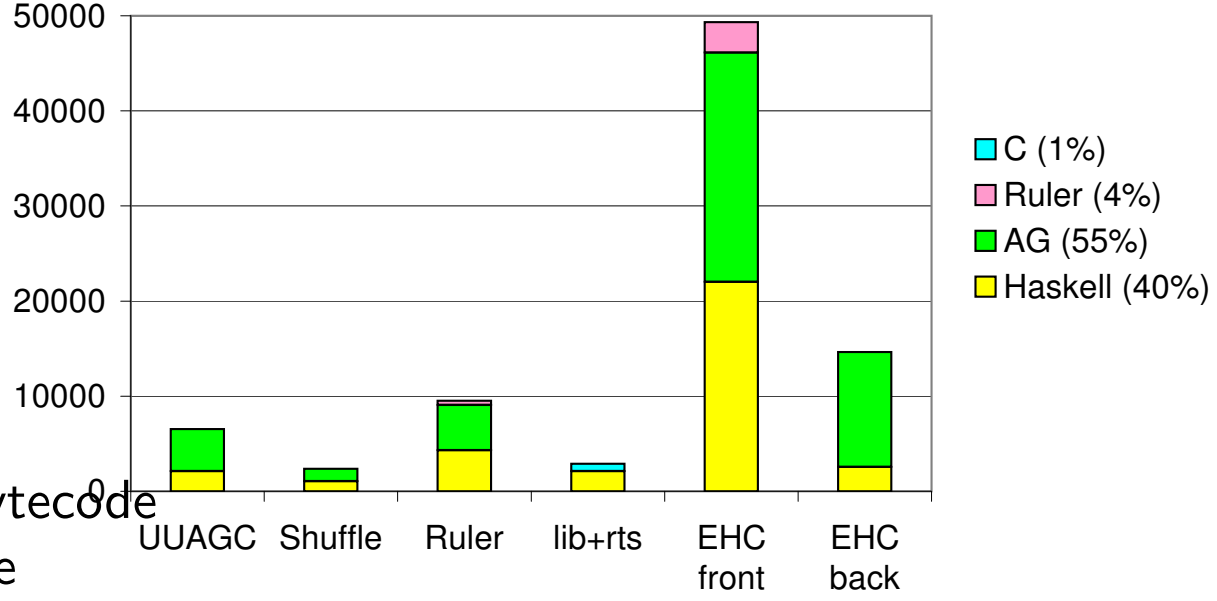

Summary

Coping with Compiler Complexity

in the Essential Haskell Compiler

Summary

Coping with Compiler Complexity

- Implementation complexity
- Description complexity
- Design complexity
- Maintenance complexity

in the Essential Haskell Compiler

Summary

Coping with Compiler Complexity

- Implementation complexity
  Transform!
- Description complexity
- Design complexity
- Maintenance complexity

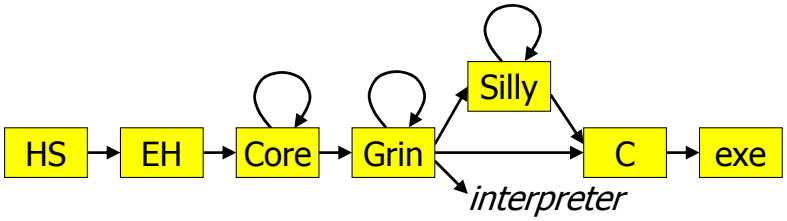

in the Essential Haskell Compiler

Summary

Coping with Compiler Complexity

- Implementation complexity
  Transform!
- Description complexity
  Use tools!
- Design complexity
- Maintenance complexity

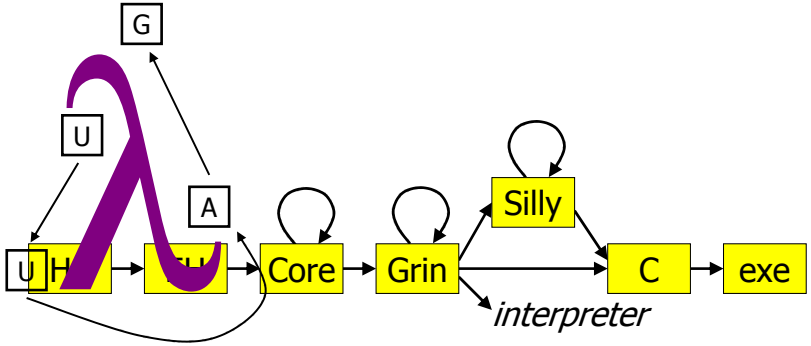

in the Essential Haskell Compiler

Summary

Coping with Compiler Complexity

- Implementation complexity
  Transform!
- Description complexity
  Use tools!
- Design complexity
  Grow stepwise!
- Maintenance complexity

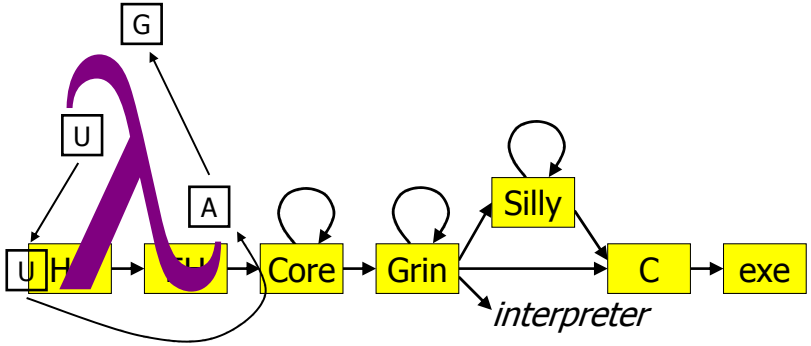

in the Essential Haskell Compiler

Summary

Coping with Compiler Complexity

- Implementation complexity
  Transform!
- Description complexity
  Use tools!
- Design complexity
  Grow stepwise!
- Maintenance complexity
  Generate, generate, generate!

in the Essential Haskell Compiler

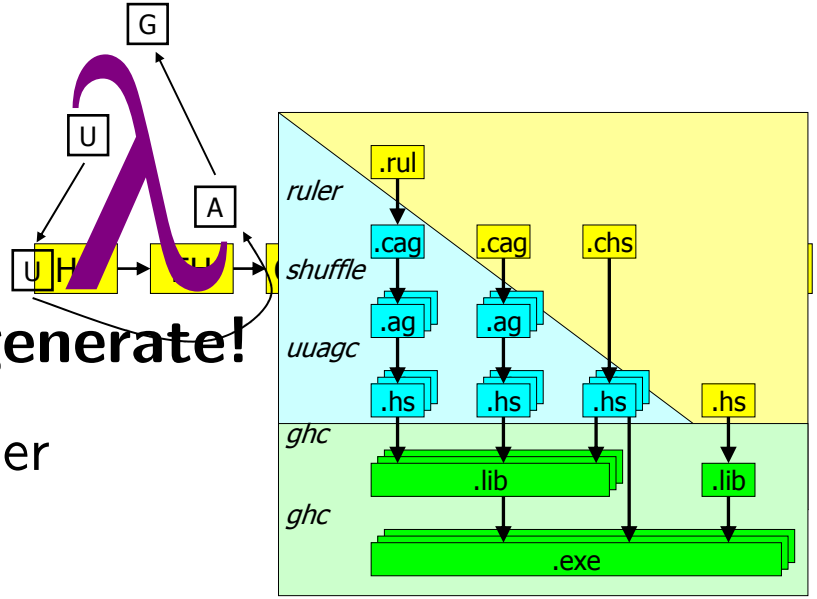

Summary

Coping with Compiler Complexity

- Implementation complexity
  Transform!
- Description complexity
  Use tools!
- Design complexity
  Grow stepwise!
- Maintenance complexity
  Generate, generate, generate!

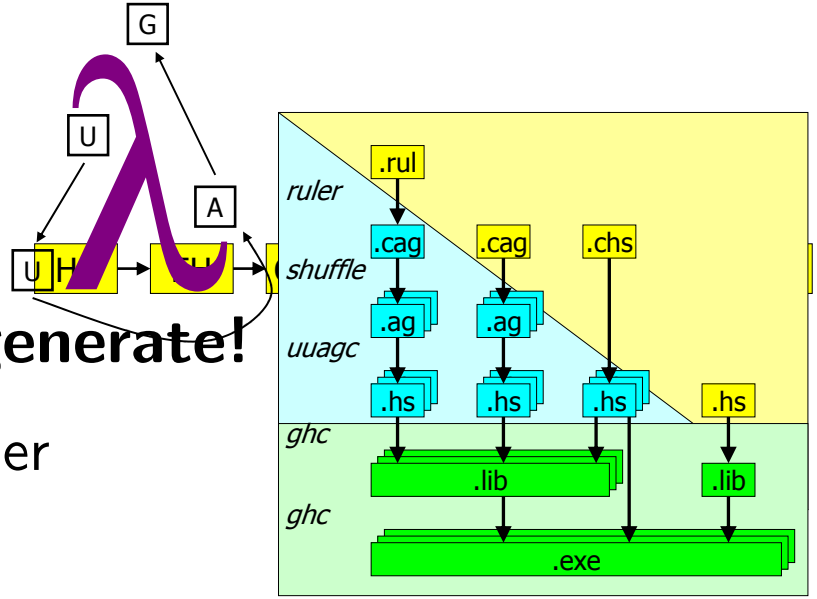

in the Essential Haskell Compiler
`www.cs.uu.nl/wiki/Ehc`